MULLION LOUVERS – MODEL A6110

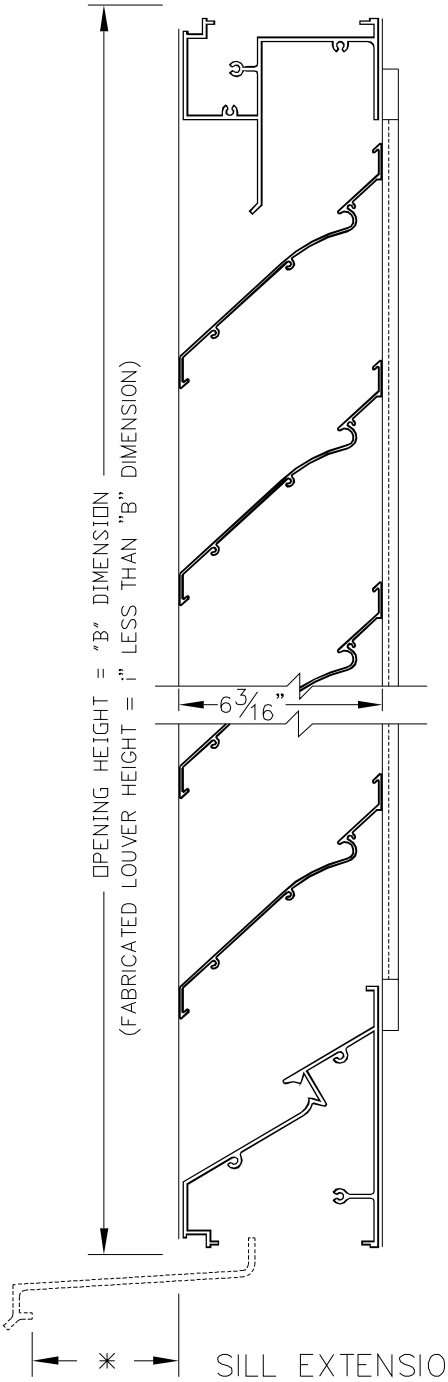

LOUVER FURNISHED WITH 1i"x1i"xe" ALUM.
CLIP ANGLES 24" O.C. (JAMBS ONLY) (MIN. 2 PER JAMB)

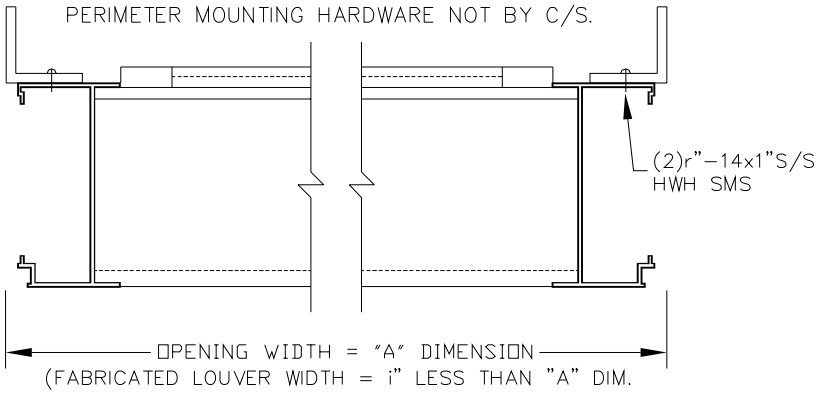

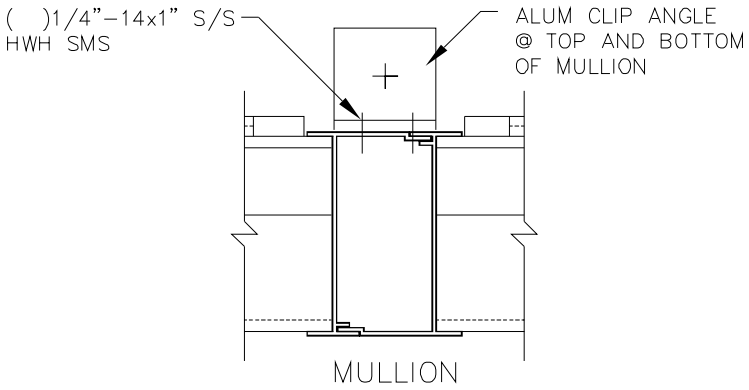

SCREENS

- ☐ SCREEN NOT REQUIRED
- ☐ SCREEN REQUIRED
- ☐ INTERIOR MOUNTED
- ☐ EXTERIOR MOUNTED
- ☐ BIRDSCREEN (1/2" MESH)
- ☐ INSECT SCREEN (18x16 MESH)

FINISHES

- ☐ STANDARD MILL
- ☐ FLUOROPOLYMER POWDER COAT
  - ☐ (1) OF C/S STD. COLORS
  - ☐ CUSTOM COLOR, C/S REQUIRES A COLOR CHIP FOR MATCHING
- ☐ ARCHITECTURAL CLASS I (DK. OR MED.) BRONZE ANODIC COATING
- ☐ 204–R1 CLEAR ANODIZE
- ☐ OTHER _____

SILL EXTENSIONS

- ☐ ✳ SETBACK DIM = 0"–3"
- ☐ ✳ SETBACK DIM = 3s"–6"

C/S EXTRUDED ALUMINUM FIXED STORMPROOF LOUVER MODEL A6110, FRAMES AND BLADES TO BE FABRICATED FROM 6063–T5 ALLOY, WITH REINFORCING BOSSES AND A NOMINAL .081" MATERIAL THICKNESS.
ALL FASTENERS TO BE STAINLESS STEEL.
UNSUPPORTED BLADE LENGTH= @ PSF.

MARK	QTY.	"A" DIM.	"B" DIM.	NUMBER OF MULLIONS	LOCATION	REMARKS
						CKD. BY:

Construction Specialties, Inc.
49 Meeker Avenue
Cranford, New Jersey 07016
(908) 272–5200
Fax (908) 272–6038

PROJECT:	DRAWN BY:
CUSTOMER:	DATE:
ARCH'T:	DWG. NO:
AGENT:	SHEET OF