Drawing No.

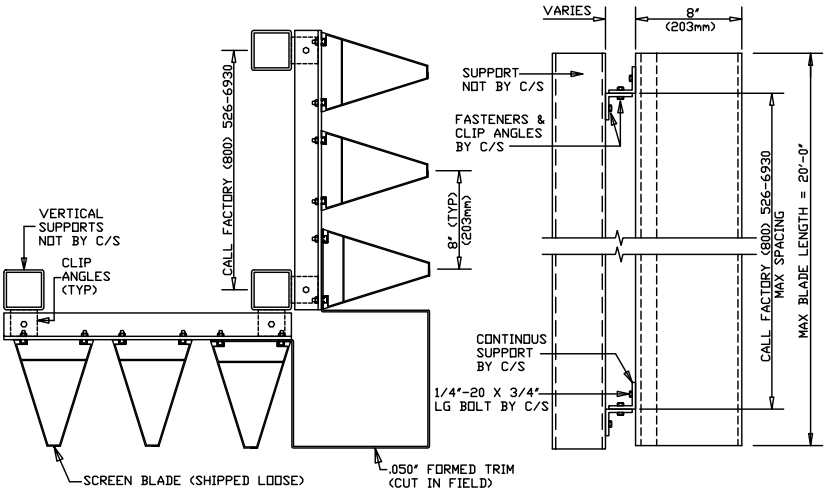

VERT-A-CADE 8000

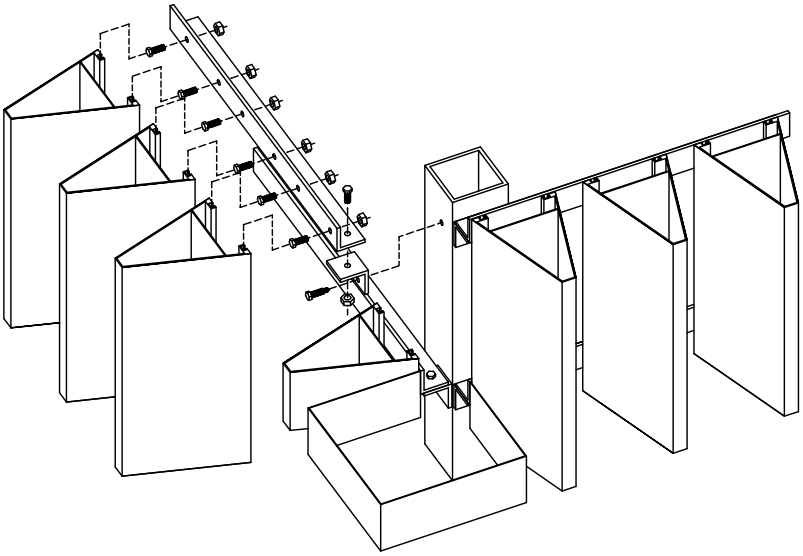

THIS DOCUMENT IS THE PROPERTY OF CONSTRUCTION SPECIALTIES, INC. AND CONTAINS CONFIDENTIAL PROPRIETARY INFORMATION THAT IS NOT TO BE DICLOSED TO THIRD PARTIES AND IS NOT TO BE USED WITHOUT APPROVAL IN WRITING FROM CONSTRUCTION SPECIALTIES, INC.

Revisions			
No.		Date	By

Drawn By

Checked By

Date Approv

Scale

Date

Job:

Cont'r.:

Arch't.:

Agent:

Sheet
Of

CONSTRUCTION SPECIALTIES, INC.
49 MEEKER AVENUE, CRANFORD, NEW JERSEY

Drawing No.