MODEL AFW/AFWC-100 THRU 400 INSTALLATION INSTRUCTIONS

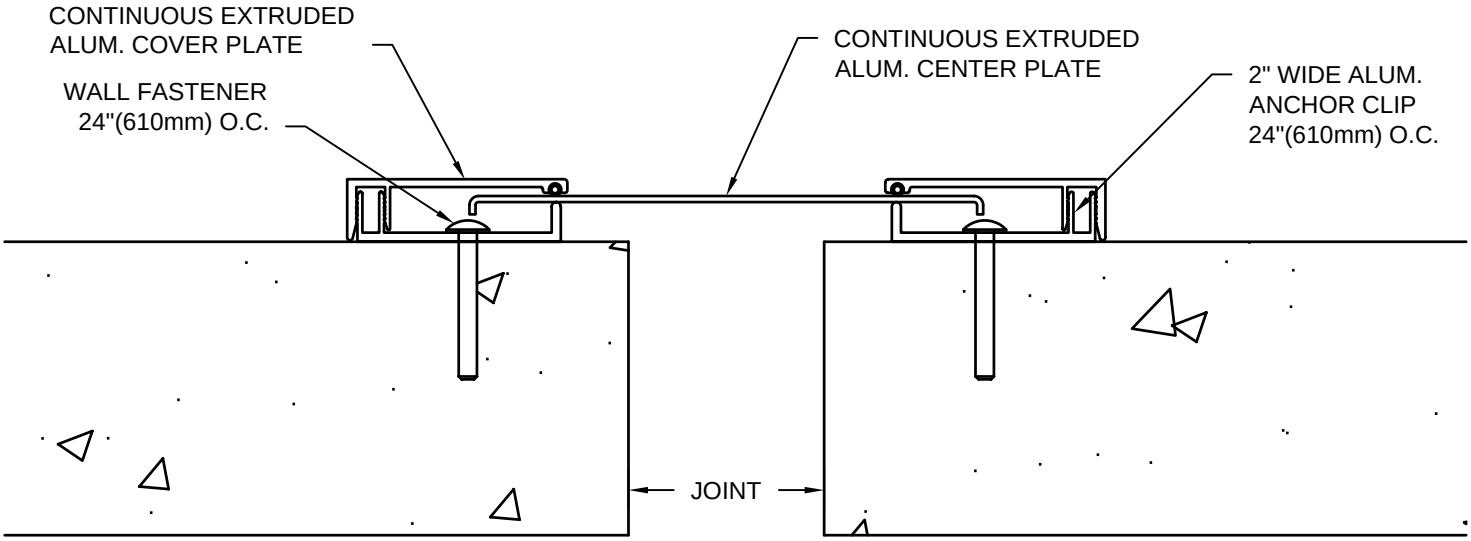

MODEL-AFW

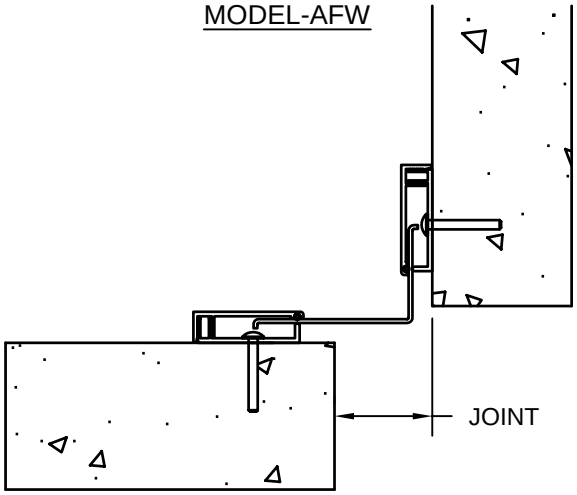

MODEL-AFWC

IMPORTANT INFORMATION

Prior to the commencement of Installation, all materials MUST be inspected for Damage. Any damage must be reported to CONSTRUCTION SPECIALTIES, INC., as soon as possible, so that replacement materials may be furnished without delay.

All work must be completed as per Architect's Approved "Shop Drawings", and in accordance with these Installation Instructions. When installation is complete, all materials must be protected from damage until the Architect's FINAL INSPECTION.

All materials should be arranged in the order that they are to be installed. All hardware required for each portion of the work should be placed with the appropriate materials.

Please review all Approved Shop Drawings and this Document to familiarize yourself with all the details and components of this assembly.

IMPORTANT:

READ THROUGH ALL INSTRUCTIONS PRIOR TO STARTING INSTALLATION

11/8/05

CONSTRUCTION SPECIALTIES, INC.
P.O. BOX 380
MUNCY, PA 17756
PHONE: (570)546-5941 FAX: (570)546-8022

This document is the property of Construction Specialties, Inc. and contains CONFIDENTIAL PROPRIETARY INFORMATION that is not to be disclosed to third parties and is not to be used without approval in writting from Construction Specialties, Inc.

Notes:
Before beginning installation, review the architectural drawings and approved Construction Specialties Inc. shop drawings to familiarize yourself with the appropriate joint cover models and locations.

Check all the joint cover components to confirm that the correct joint cover model and size have been received. Also, check for materials that may have been damaged during shipping. Report all incorrect and/or damaged components to C/S at 800-233-8493.

Read through all the steps of these instructions prior to beginning work.

Remove protective coating from all parts **before** installation.

STEP 1

ANCHOR CLIP INSTALLATION

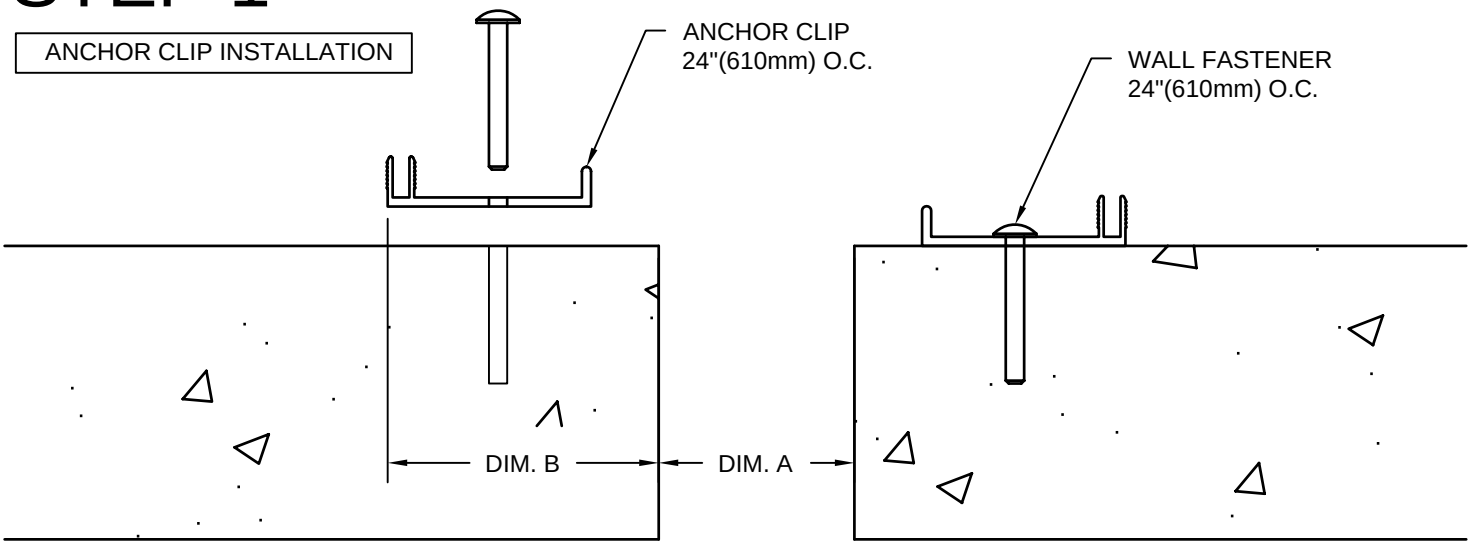

MODEL-AFW

FRAME LOCATION DIMENSIONS		
DIM. A	DIM. B	DIM. C
1" [25.4mm]	1-7/8" [48.4mm]	2-5/8" [66.7mm]
2" [50.8mm]	2-3/4" [70.4mm]	3-5/8" [92.1mm]
3" [76.2mm]	3-3/4" [95.64mm]	5-7/8" [149.2mm]
4" [101.6mm]	3-3/4" [95.64mm]	5-7/8" [149.2mm]

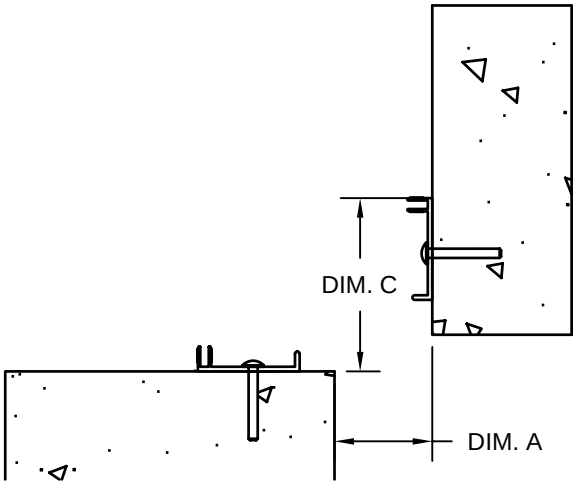

MODEL-AFWC

Note:
If a C/S Fire Barrier is to be installed in the joint, please review the Fire Barrier Installation Instructions supplied, and if required install the Fire Barrier **BEFORE** installation of C/S Expansion Joint Cover.

1.1) Begin installation of the Anchor Clips by snapping a plumb vertical chalk line at Dim. B & Dim. C. Note: The Anchor Clips must be installed plumb and square with chalk line to facilitate proper alignment and engagement of the Cover Plate. See Details above.

1.2) Attach the Anchor Clips to the wall at 24"(610mm) o.c. maximum, with the appropriate C/S supplied anchors.

1.3) Repeat the installation procedures for the opposite side of the joint if required.

STEP 2

CENTER PLATE INSTALLATION

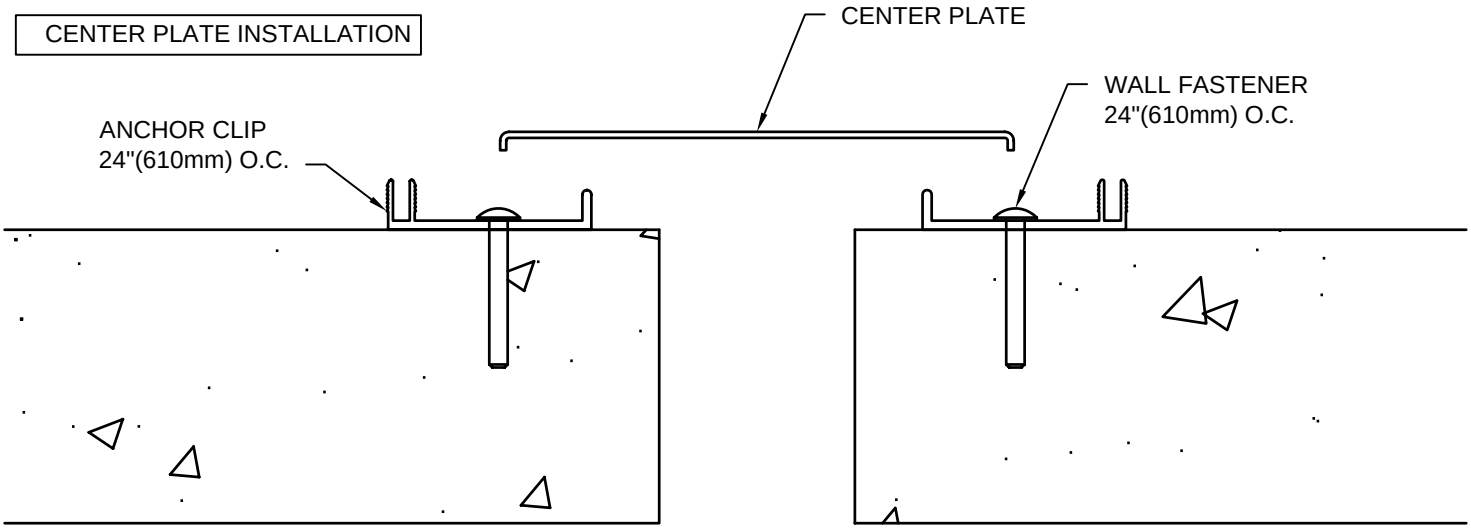

MODEL-AFW

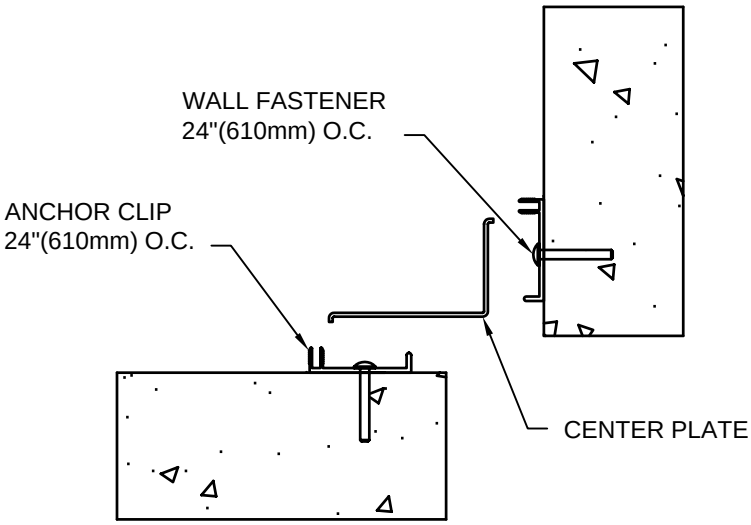

MODEL-AFWC

2.1) Begin installation of the Center Plate by first cutting the Plate to length as needed.

2.2) Place Center Plate on top of the Anchor Clips, keeping it centered over the joint, as shown above.

STEP 3

COVER PLATE INSTALLATION

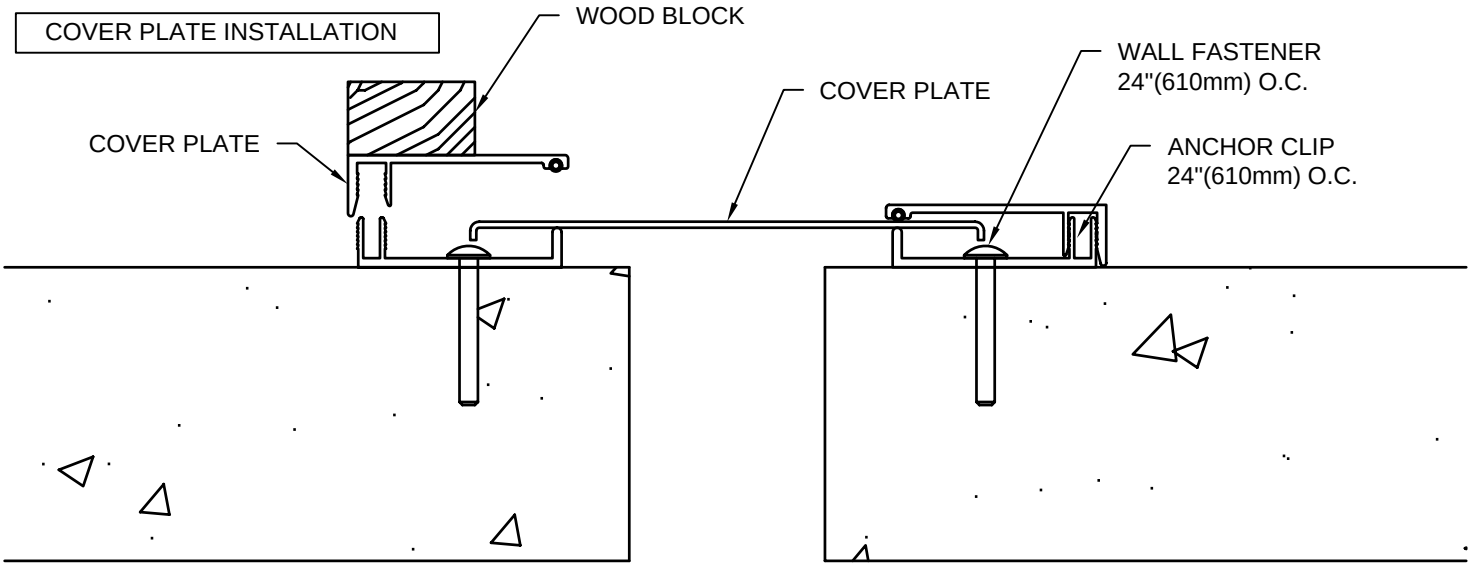

MODEL-AFW

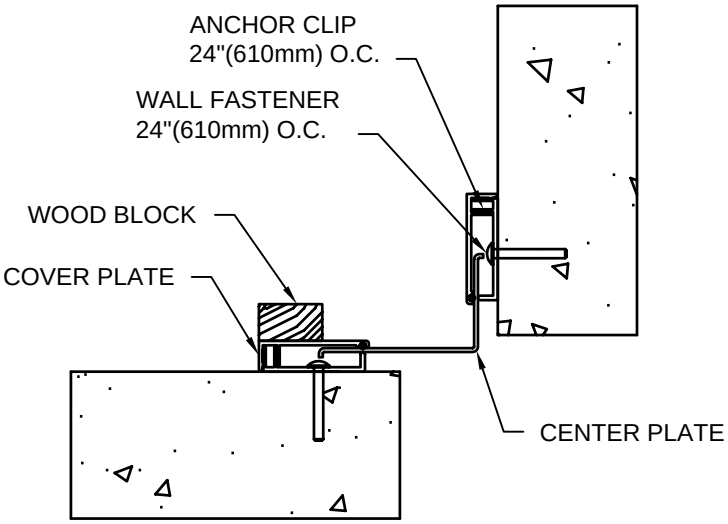

MODEL-AFWC

3.1) Begin installation of the Cover Plate to anchor clips by aligning one end of a length of Cover Plate with the end of the installed anchor clips.

3.2) Place a wood block on top of the Cover Plate. While holding the Cover Plate somewhat level, use a rubber mallet to strike the wood block. (Note: Do not hammer directly onto the Cover Plates as this may cause damage to the Cover Plate.)

3.3) Work down along the length of the Cover Plate driving the Cover Plate approx. half onto the Anchor Clips. Then return and drive the Cover Plate the remainder of the way in until the Cover Plate is seated flush with the wall.

3.4) Repeat these procedures for the opposite side of the joint and for any additional lengths of Cover Plate.

STEP 4

COMPLETE INSTALLATION

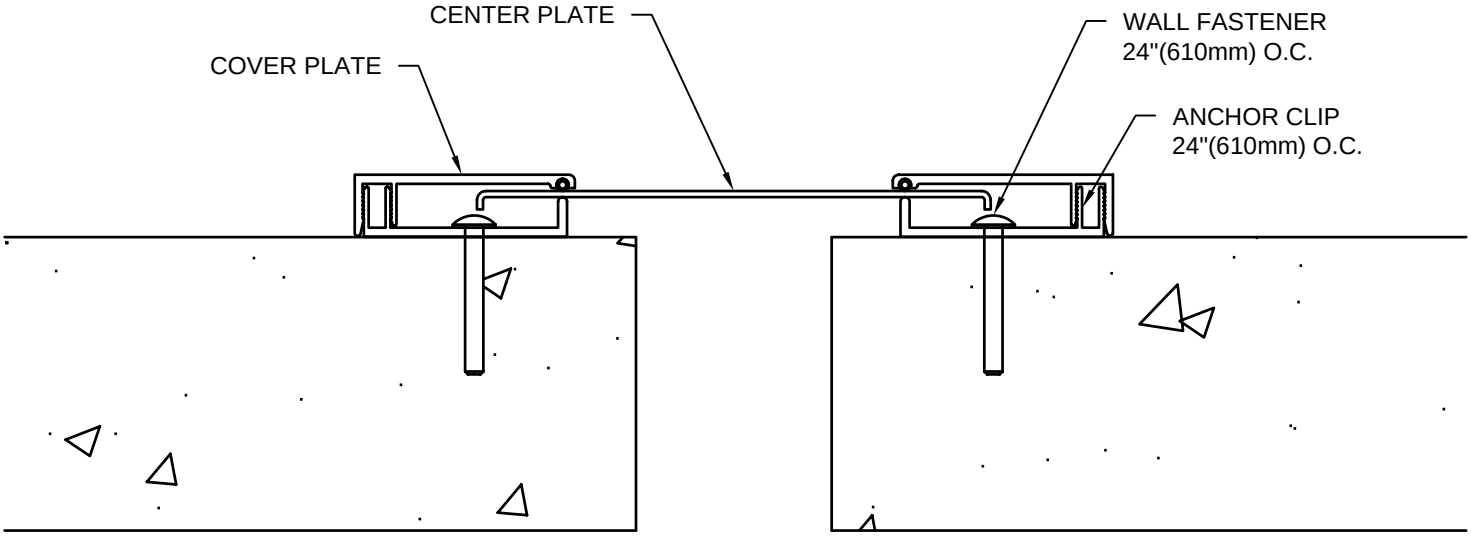

MODEL-AFW

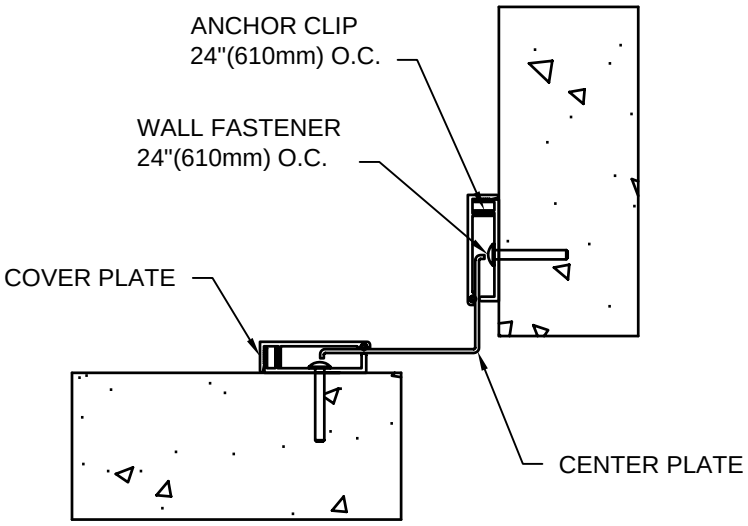

MODEL-AFWC

4.1) When installation of the C/S Wall Expansion Joint Cover has been completed, remove all residue and foreign matter from the area and joint cover.

4.2) Clean the C/S Joint Cover and adjoining surfaces with proper cleaner.

4.3) Protect the Joint Cover until the Architect's final inspection.