MODEL SM/SMC-100 THRU 400 INSTALLATION INSTRUCTIONS

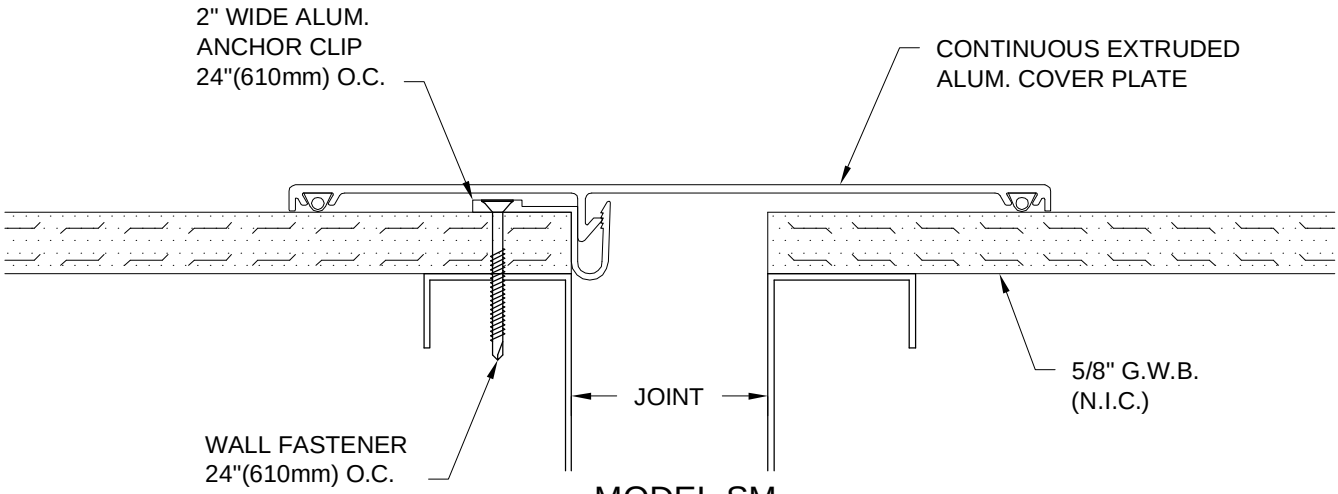

MODEL-SM

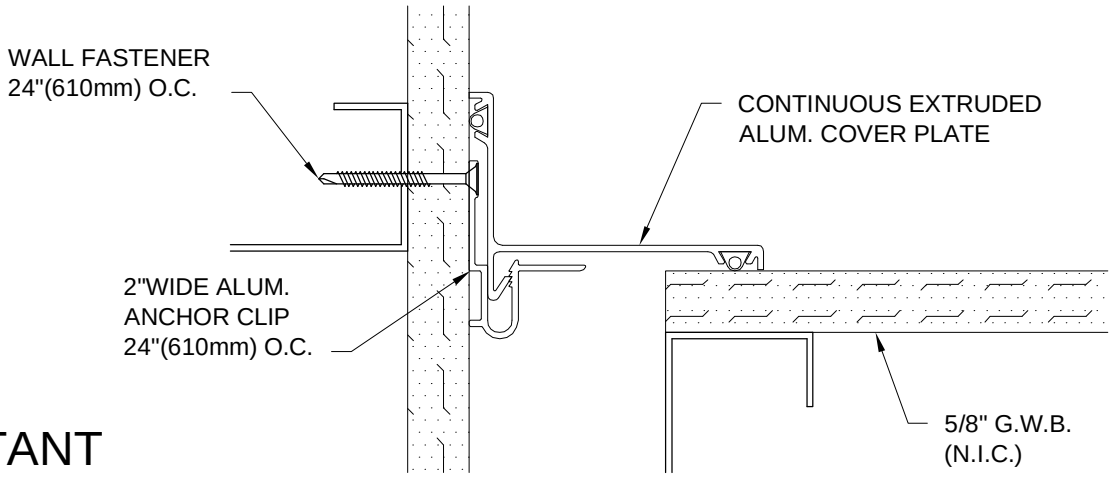

MODEL-SMC

IMPORTANT INFORMATION

Prior to the commencement of Installation, all materials MUST be inspected for Damage. Any damage must be reported to CONSTRUCTION SPECIALTIES, INC., as soon as possible, so that replacement materials may be furnished without delay.

All work must be completed as per Architect's Approved "Shop Drawings", and in accordance with these Installation Instructions. When installation is complete, all materials must be protected from damage until the Architect's FINAL INSPECTION.

All materials should be arranged in the order that they are to be installed. All hardware required for each portion of the work should be placed with the appropriate materials.

Please review all Approved Shop Drawings and this Document to familiarize yourself with all the details and components of this assembly.

IMPORTANT:
READ THROUGH ALL INSTRUCTIONS PRIOR TO STARTING INSTALLATION

3/24/10

Construction Specialties™
6696 Route 405 Highway, Muncy PA 17756
(800) 233-8493 . Fax (570) 546-5169 .www.c-sgroup.com

This document is the property of Construction Specialties, Inc. and contains CONFIDENTIAL PROPRIETARY INFORMATION that is not to be disclosed to third parties and is not to be used without approval in writing from Construction Specialties, Inc.

Notes

Before beginning installation, review the architectural drawings and approved Construction Specialties Inc. shop drawings to familiarize yourself with the joint cover models and locations.

Check all of the joint cover components to confirm that the correct joint cover model and size have been received. Also, check for materials that may have been damaged during shipping. Report all incorrect and/or damaged components to C/S at 800-233-8493.

Read through all the steps of these instructions prior to beginning work.

Remove protective coating from all parts **before** installation.

STEP 1

ANCHOR CLIP INSTALLATION

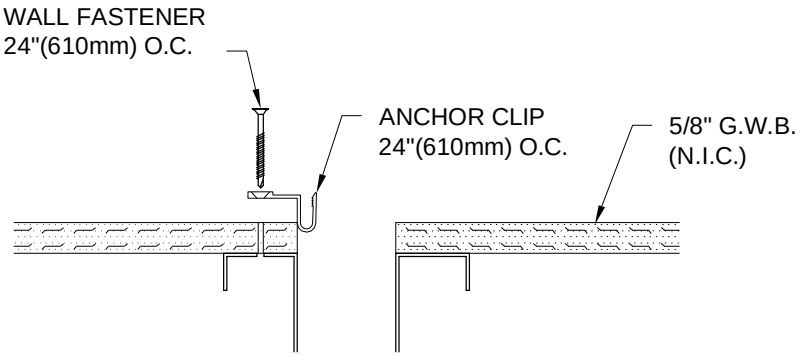

MODEL-SM

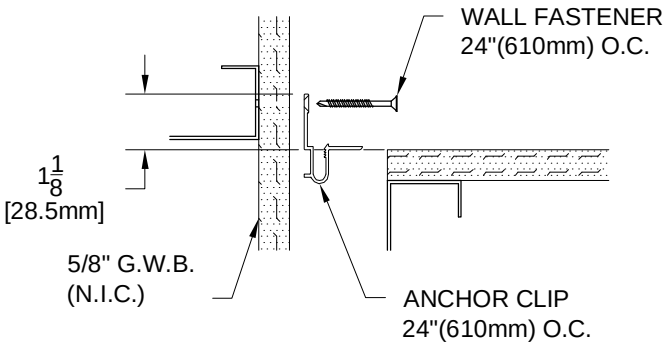

MODEL-SMC

Note:

If a C/S Fire Barrier is to be installed in the joint, please review the Fire Barrier Installation Instructions supplied, and if required install the Fire Barrier **BEFORE** installation of C/S Seismic Expansion Joint aluminum frames.

Step 1:

1.1) Begin installation by locating anchor clips on wall 24"(610mm) o.c.
- For model SM, the anchor clip is located on the edge of joint (see detail above).
- For model SMC, the top of the anchor clip is measured 1-1/8"(28.5mm) from the face of the wall (see detail above).

1.2) Using the anchor clips as a template, mark the locations of the fasteners. (Note: The "U" shaped portion of the clips must be aligned vertically to properly receive the Cover Plate.)

1.3) Remove anchor clips and, if necessary, drill the holes for the fasteners. The holes are to be drilled with the appropriate size and type of drill bit as indicated by the manufacturer of the C/S supplied fasteners.

1.4) Reposition the anchor clips and attach using appropriate C/S supplied fasteners.

STEP 2

COVER PLATE INSTALLATION

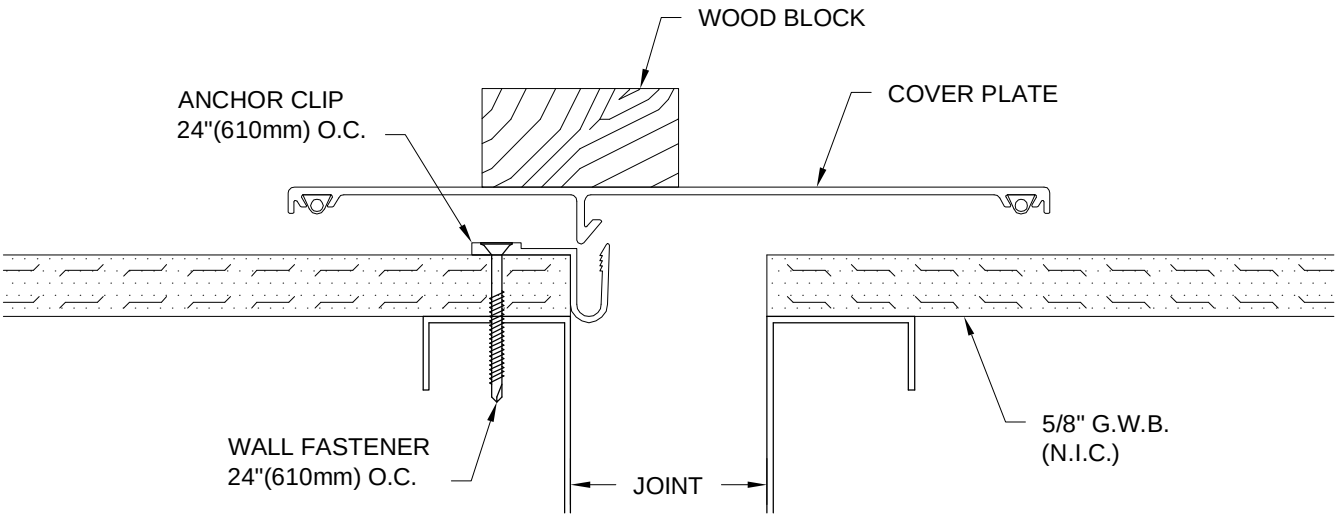

MODEL-SM

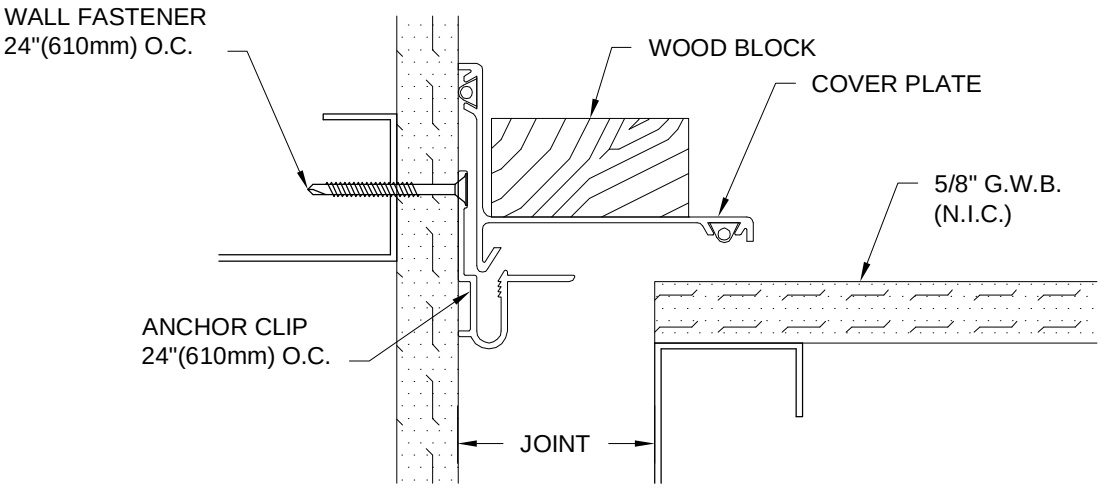

MODEL-SMC

Step 2:

Note: Before installation of the Cover Plate, measure the length/height of the run of cover and cut the Cover Plate to length as needed.

2.1) Begin installation of the Cover Plate to anchor clips by aligning one end of a length of Cover Plate with the end of the installed anchor clips. Align the "J-Hook" on the underside of the Cover Plate with the locking channel of the anchor clips.

2.2) Place a wood block on top of the Cover Plate over the "J-Hook" area. While holding the Cover Plate somewhat square, use a rubber mallet to strike the wood block and drive the "J-Hook" into the locking channel. (Note: Do not hammer directly onto the Cover Plates as this may cause damage to the Cover Plate.)

2.3) Work down along the length of the Cover Plate driving the "J-Hook" approx. half of the way in. Then return and drive the Hook the remainder of the way in until the Cover Plate is seated against the slab.

2.4) Repeat these procedures for any additional lengths of Cover Plate.

STEP 3

COMPLETE INSTALLATION

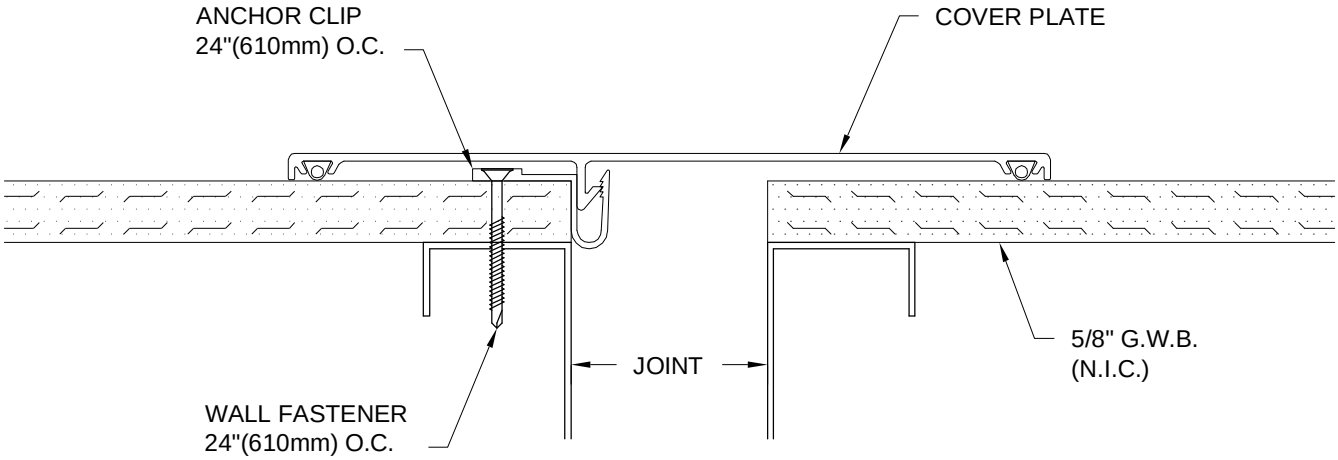

MODEL-SM

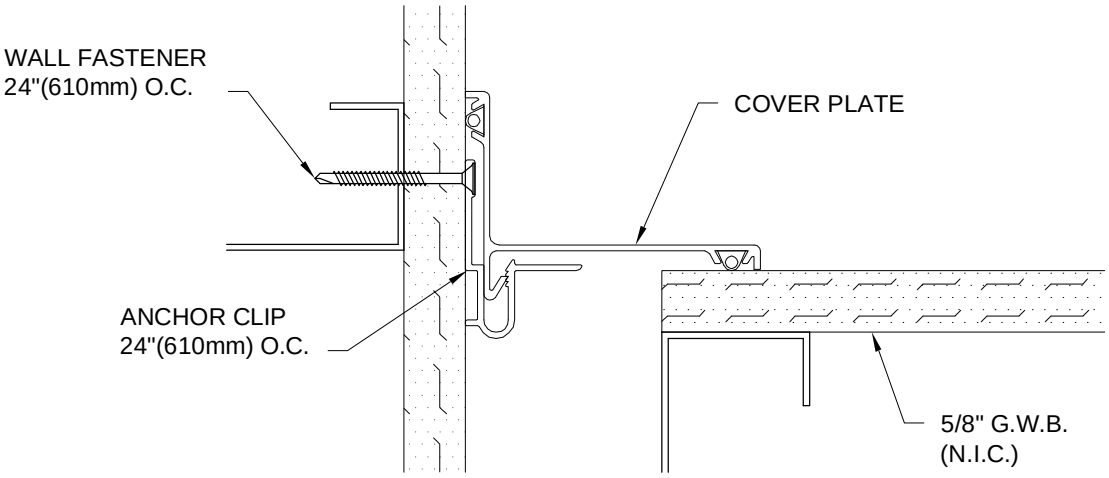

MODEL-SMC

Step 3:

3.1) When installation of the C/S Wall / Ceiling Expansion Joint Cover has been completed, remove all residue and foreign matter from the area and joint cover.

3.2) Clean the C/S Joint Cover and adjoining surfaces with proper cleaner.

3.3) Protect the Joint Cover until the Architect's final inspection.