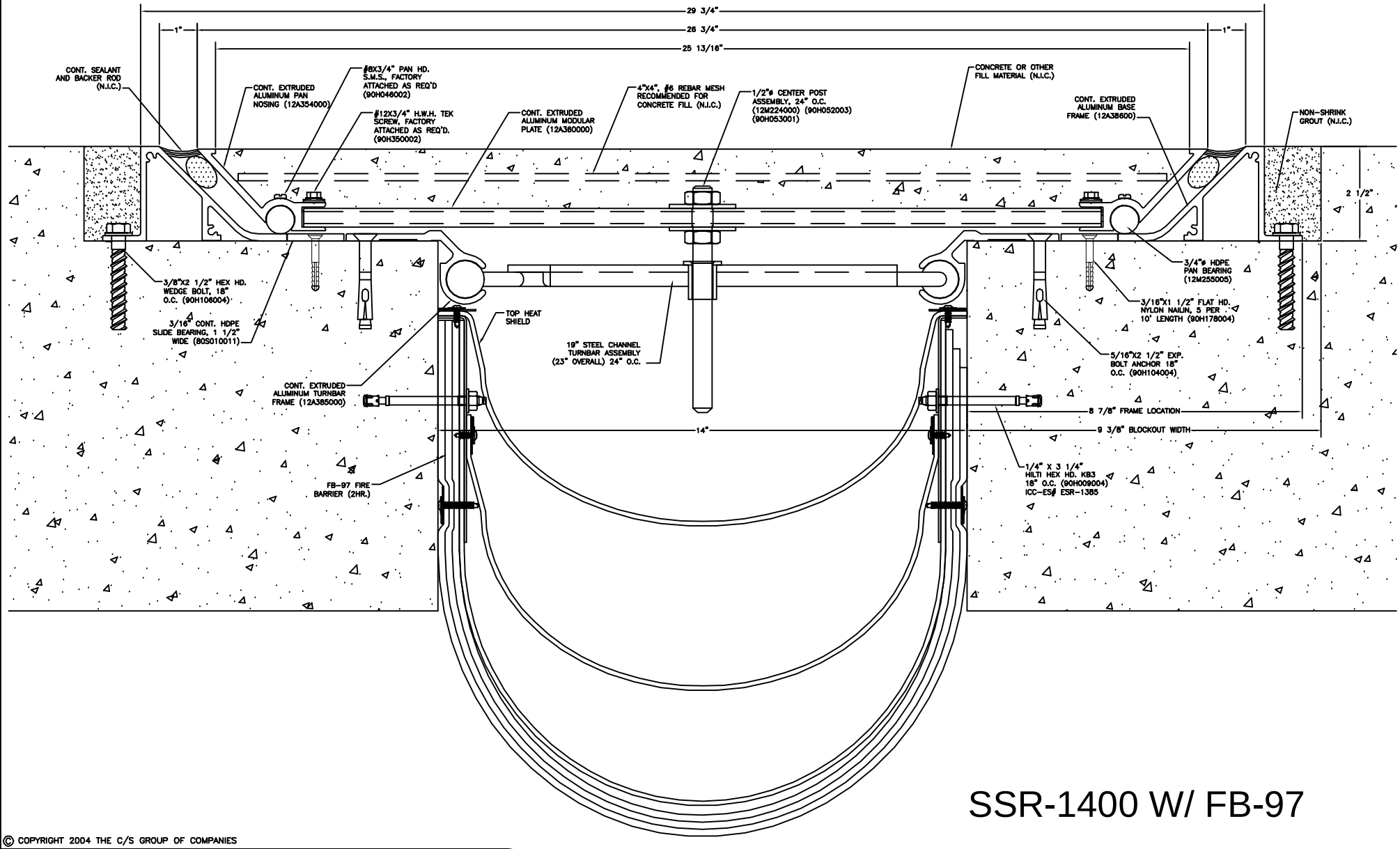

SSR-1400 W/ FB-97

© COPYRIGHT 2004 THE C/S GROUP OF COMPANIES

C/S Group
Construction Specialties, Inc – C/S Construction Specialties company
Manufacturing / Sales Locations:

U.S.A. – Tel:(570) 546-5941/Fax:(570)546-8022/info@c-sgroup.com
Canada – Tel:(905) 274-3611/Fax:(905)274-6241/canada@c-sgroup.com
England – Tel:+44-1-296-611000/Fax:+44-1-296-399444/info@c-sgroup.co.uk
France – Tel:+33-232-648400/Fax:+33-232-648421/export@cs-france.fr
Singapore – Tel:+65-6-276-4276/Fax:+65-6-273-7557/conspec@singnet.com.sg
Malaysia – Tel:+60-3-556-95227/Fax:+60-3-556-95237/conspec@c-sgroup.com.my
Hong Kong – Tel:+852-2892-0917/Fax:+852-2892-0956/conspec@c-sgroup.com.hk
Taiwan – Tel:+886-2-2712-8120/Fax:+886-2-2713-9022/conspec@c-sgroup.com.tw
Australia – Tel:+61-2-9540-5400/Fax:+61-2-9540-5253/sales@c-sgroup.com.au
New Zealand – Tel:+64-4-527-9156/Fax:+64-4-528-8347/info@c-sgroup.co.nz
U.A.E. – Tel:+971-4-331-2167/Fax:+971-4-331-5023/c_sgroup@emirates.net.ae
Uruguay – Tel:+598-2-525-0126/Fax:+598-2-525-2489/c-sgroup@adinet.com.uy

PROJECT: -	SCALE: SCALED TO FIT
CUSTOMER: -	SUB. BY: -
LOCATION: -	DATE: -
JOB NO.: -	SHT. 1 OF 1

© COPYRIGHT 1991 THE C/S GROUP