NOTES:

1. MAXIMUM VENEER EDGE PANEL SIZE IS 48" X 120".
2. ALL WALL PANELS HAVE A NOMINAL THICKNESS OF 3/8".
3. WOOD GRAIN DIRECTION IS PARALLEL TO THE 120" SIDE OF A VENEER EDGE PANEL UNLESS OTHERWISE NOTED.
4. PANEL SYSTEM IS DESIGNED TO BE FACTORY CUT. THEREFORE FIELD VERIFIED DIMENSIONS ARE REQUIRED.

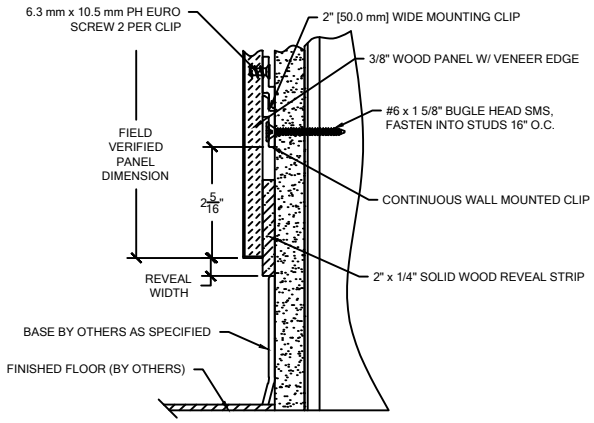

BASE CONDITION

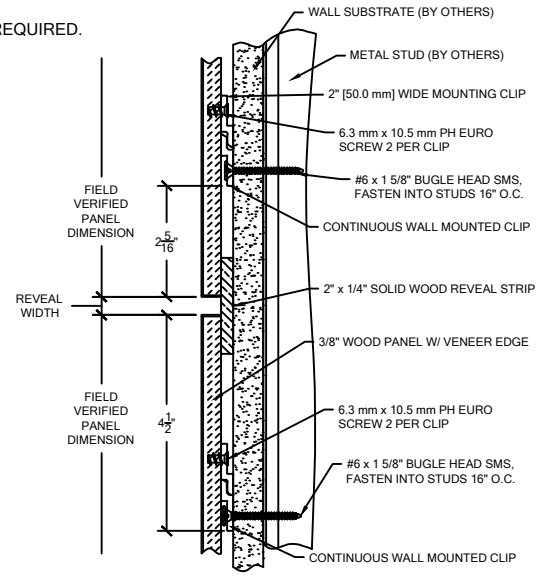

HORIZONTAL REVEAL

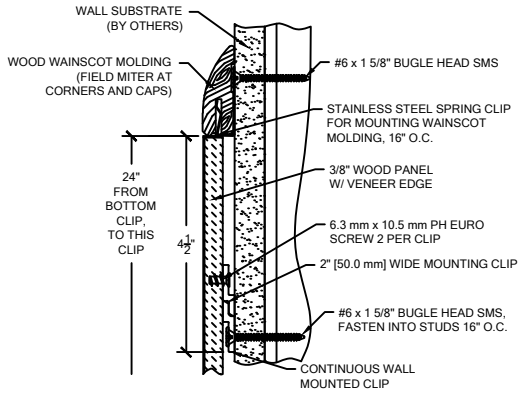

WOOD WAINSCOT

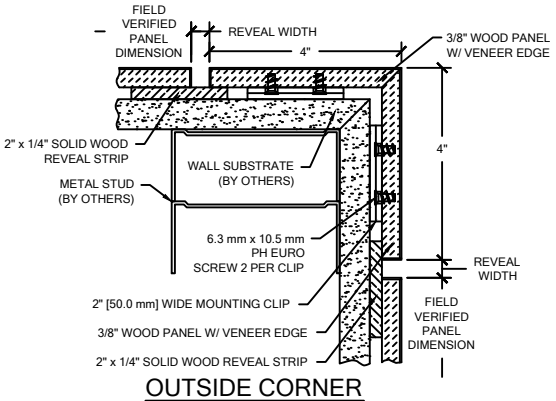

OUTSIDE CORNER

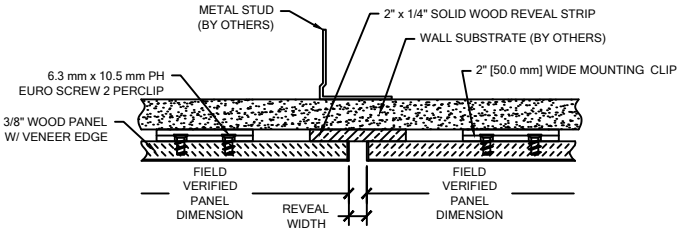

VERTICAL REVEAL

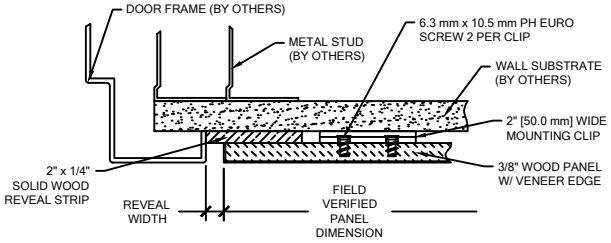

END REVEAL

C/S WALL PANELS ARE UL RATED AND MEET CLASS A/1 FIRE RATING WHEN TESTED IN ACCORDANCE WITH ASTM-E84

VENEER EDGE RENAISSANCE WALL PANELS

DEMOUNTABLE "Z" CLIP SYSTEM AT PARTIAL HEIGHT

Construction Specialties™
6696 Route 405 Highway, Muncy PA 17756
(800) 233-8493 • Fax (570) 546-4692 • www.c-sgroup.com

PROJECT:	REVISION:
JOB NO.:	F&F:
CUSTOMER:	
REP:	DATE:
DRAWN BY:	SHEET NO: