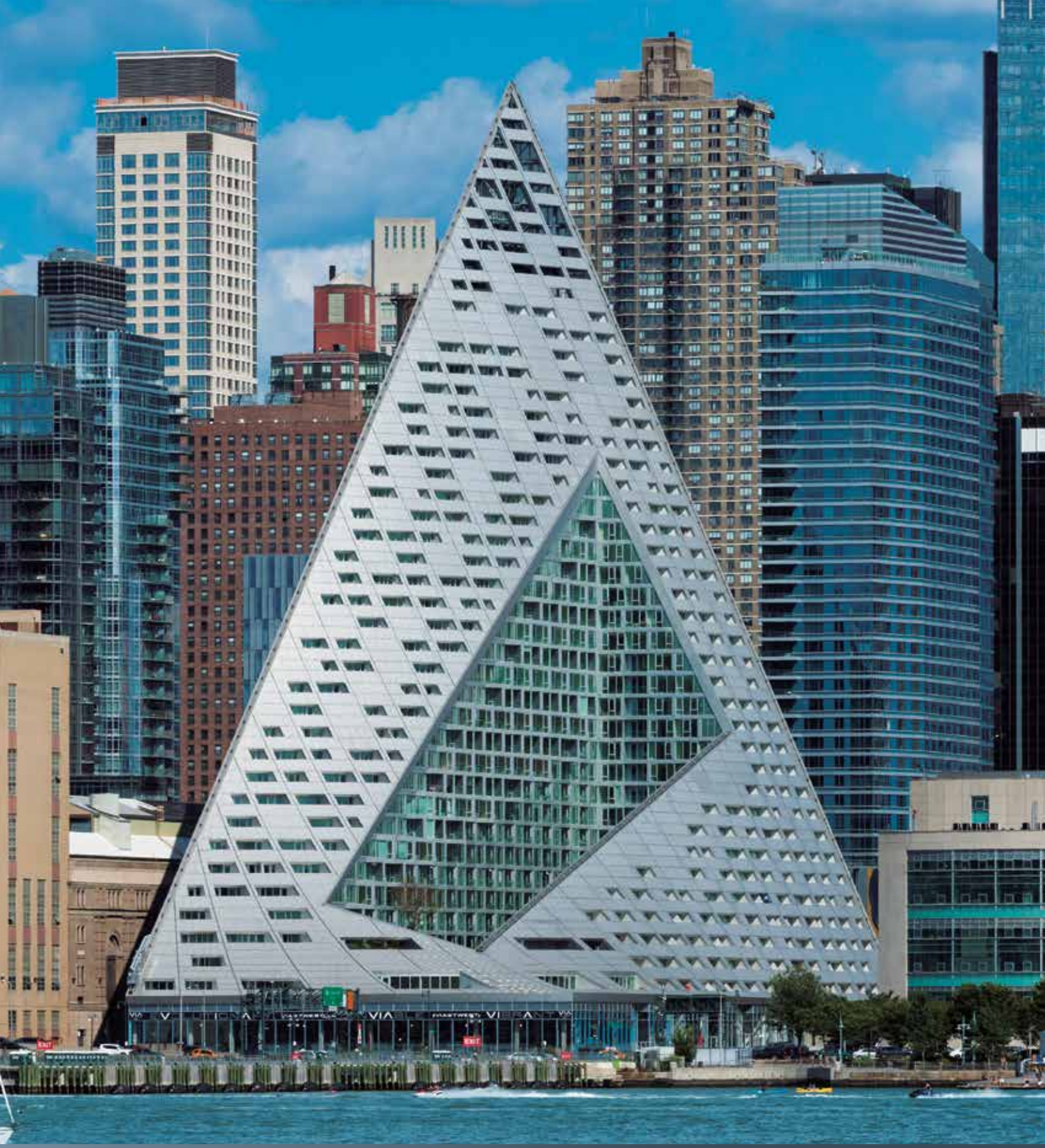

2017 08 91 00

CS™ Louvers

Construction Specialties®

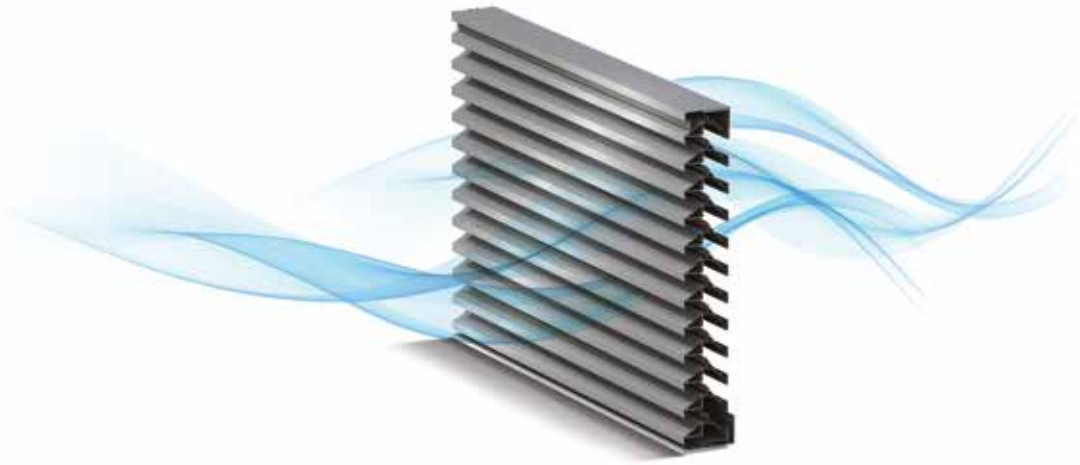

AIRFLOW FUNCTION.

design freedom.

Ventilation isn't a **restriction**. It's an **opportunity**.

Louvers by Construction Specialties let architects do what they've always wanted: **defy traditional airflow design conventions to achieve their true vision — without sacrificing performance**.

So go ahead. Give your airflow system protection from the elements. Conceal it while still allowing air to flow. Hide mechanical elements in a functional form of the building's own skin.

Indulge your imagination and specify a louver that we don't even manufacture — yet. CS will work with you to design a custom louver solution and test it in our exclusive AMCA-certified test chamber. **Do all of that — with a full palette of textures, colors and finishes at your disposal.**

CS LOUVERS LET BUILDINGS BREATHE EASY — SO ARCHITECTS CAN, TOO.

Cover Photo: Iwan Baan

VIA 57 West

Design recognition and airflow performance, via CS

When commissioned by The Durst Corporation in 2010, architecture and design firm Bjarke Ingels Group (BIG) and engineer SLCE Architects **wanted to make a statement by bringing a new residential typography to the iconic Manhattan skyline**. The final output, dubbed VIA 57 West, today is a visually striking hybrid between the European perimeter block and a traditional Manhattan high-rise.

Among its 21st century features, VIA 57 West integrates residential and retail programming, a green plaza, angular balconies skewed at 45-degree angles, as well as stunning views of the nearby waterfront and Hudson River Park, with minimal traffic noise.

Throughout the design and planning phases, the building's materials, products, construction methods and operations were all carefully scrutinized by The Durst Corporation to prioritize impact on both the environment and daily living experience. **One of those products was CS Fixed Horizontal Storm-Resistant Louvers (RSH-5700).**

Installed lengthwise above the building's first floor curtain wall and embedded throughout the pyramid's staggered, steeply sloped façade, the louvers provide the complex's 750 residences with enhanced airflow and weather protection from swift winds along the Hudson River — **all without compromising the building's sleek aesthetic**. The project also utilized CS Econo-Line Grilles (EL-240) for aesthetic vision screening.

VIA 57 West
Location: New York, NY
Architect: BIG Architects

Photo: Iwan Baan

To date, the project has earned more than 10 national and international architecture awards and merits, including the 2016 International Highrise Award and the 2016 Council on Tall Buildings and Urban Habitat (CTBUH) Tall Building Award.

VIA 57 West reinforces that just as there are three sides to every pyramid, **there are three sides to every CS Louver installation: airflow performance, weather protection and uncompromised aesthetics**.

Product RSH-5700
Fixed Horizontal
Storm-Resistant Louver
See page 20 for details.

Product EL-240
Vert-a-Cade® Econo-Line
Vision Barriers

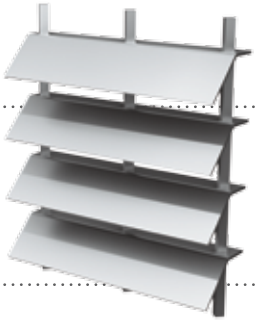

CSGROUPCOM/LOUVERS

4 World Trade Center

Exemplifying freedom, in airflow and in spirit

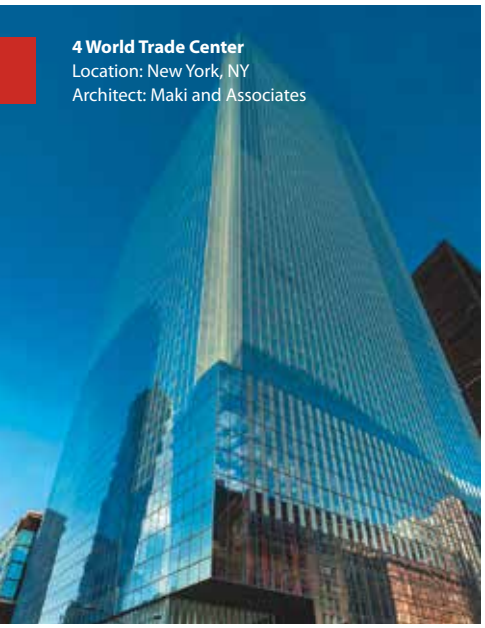

4 World Trade Center
Location: New York, NY
Architect: Maki and Associates

As Maki and Associates began designing 4 World Trade Center, the firm started with the goal of paying homage to its location at the southeast corner of the original World Trade Center site, while also creating a backdrop for the National September 11 Memorial & Museum.

Replacing the original 4 World Trade Center, the 72-story building would require world-class products, just like its predecessor did when it was originally built in 1975. A range of products were considered, and **Maki and Associates turned to Construction Specialties RS-5605 Storm-Resistant Vertical Louvers for their proven weather resistance and performance**. (The sixth-tallest structure in New York City, the building can face intense wind and water at its higher floors.)

The structure, which takes the shape of a parallelogram at its base and a trapezoid up top, relies on CS storm-resistant louvers to provide **superior water infiltration defense amid gusting winds and rain**. Coated with a metallic finish, mechanical louvers were oriented on lower floors as thin vertical slits for added visual appeal.

Equipped with a sheer metallic blue curtain wall over the structure's steel framework, a glass façade creates a flat exterior plane that bears an iconic aesthetic that harmonizes beautifully with the rest of the new World Trade Center complex — which also features CS Louvers at the iconic One World Trade Center and new World Trade Center Transportation Hub, which will ultimately connect to all World Trade Center towers (see opposite page).

Housing a range of public and private tenants, 4 World Trade Center's occupants (and mechanical systems) get **plenty of fresh air and are well-protected from the elements** — that, and they get a sprawling, beautiful bird's-eye view of one of the world's great cities.

Product RS-5605
Storm-Resistant Vertical Louver

C-SGROUPCOM/LOUVERS

One World Trade Center
Location: New York, NY
Architect: SOM

The CS Louver Connection

Louvers from Construction Specialties make an impact across the new World Trade Center complex. **At the iconic One World Trade Center, more than 166,000 square feet of CS Storm-Resistant Fixed Horizontal Louvers (RSH-5700) built from 429 tons of aluminum** span its topmost floors to provide Class-A wind-driven rain resistance while blending seamlessly into its stunning glass curtain wall.

A stone's throw away, at the state-of-the-art World Trade Center Transportation Hub (aka, "The Oculus"), **CS Blast-Resistant Horizontal Louvers (BLH-5709) assist with airflow while providing blast resistance** at the base of the structure's "ribs." The visually poignant 800,000-square-foot hub, completed in 2016, serves 250,000 commuters daily and is the third largest transportation center in New York City. Ultimately, the facility will connect guests to 11 subway lines and World Trade Center Towers 1, 2, 3 and 4.

Product BLH-5709
Blast-Resistant Horizontal Louvers

Oculus Architect: Santiago Calatrava

Madison Square Garden
Location: New York, NY
Architect: BBB Architects

Madison Square Garden

Renovating an icon

Madison Square Garden is dubbed "the World's Most Famous Arena" for a reason — or several. The 50-year-old drum-shaped sports and entertainment venue sits in the heart of midtown Manhattan, atop North America's busiest railroad station.

But because BBB Architects' $1 billion interior/exterior renovation included enhancements to MSG's HVAC and air-intake systems, it also needed a better airflow solution. For an ordinary arena, an ordinary louver system might have worked just fine. **But they don't call it the "World's Most Ordinary Arena."**

Over the course of a three-year facelift, each of MSG's claims to fame represented a new design challenge. The building's trademarked circular shape and fluted alcoves ruled out traditional louvers. Because it is home to two major sports teams, delivery and construction had to be planned around off-season dates.

And delivering product into midtown? **Even a corner bodega owner knows that ain't easy.**

To address these challenges, BBB worked with Construction Specialties to make a curved version of its vertical RSV-5700 Storm-Resistant Louver and **test the new form in-house** for airflow and storm resistance. The radiused louvers were then prefabricated and shipped to the customer's Long Island facility to be delivered to the arena as needed.

Today, these Cradle to Cradle Silver Certified™ custom-built and tested louvers are nestled comfortably in the sides of MSG's "drum" and are outfitted with a dynamic LED lighting system that reflects color schemes associated with each evening's events.

When changing the World's Most Famous Anything, keeping its visual identity is a must. Actually improving upon it? *Fuhgettaboutit.*

Product Custom RSV-5700
Custom-Curved, Storm-Resistant, Fixed Vertical Louver
See page 21 for details.

Please see our stadium and arena brochure in the Literature section of our website or call 800.233.8493 to request a copy.

Defy boring

What do louvers do, anyway? They provide airflow. They prevent water penetration. In short — they work. **But who said that because louvers are functional, they have to be uninteresting?**

Construction Specialties **Bold Line Louvers** don't just perform beautifully — they are beautiful. And they're anything but boring.

Bold Line adds drama to any louver application by allowing complete blade depth and color freedom while providing high free area and superior water protection. With Bold Line, the louvers **are** the design — not simply a requirement or compromise. Infuse your project with striking textures, vivid colors and artistic patterns. Accentuate façades with **crisp shadow lines, varying blade depths, asymmetrical blade frequencies and staggered blade placement**. And do it all with AMCA-certified performance.

Bold Line is **the most aesthetically flexible louver system we've ever offered**. Each Bold Line blade is finished individually with our 20-Year Powder Coat, so you can specify custom-colored accent blades in multiple colors within a single system. Bold Line also comes in a storm-resistant model, so its stunning visual features don't come at the expense of function. And Bold Line is AMCA-certified so you can be sure of the high performance you're getting. Think of Bold Line when you're at the conceptual stage of your next design to turn your bold idea into a bold reality.

Product B-7505A
Storm-Resistant Louver
See page 21 for details.

Product B-6485A
Standard Louver
See page 25 for details.

Note: Bold Line model available with color LED lighting.

San Francisco International Airport

Innovative design takes flight

San Francisco has never worried about being different. So for the new air traffic control tower at San Francisco International Airport, a traditional exterior **simply wouldn't fly**. Neither would a traditional louver.

The plane-monitoring turret resembles a futuristic funnel spiraling toward the sky. Of course, this design required custom-curved walls. To complement the panel systems, the architects turned to Construction Specialties, but not for the traditional reasons of superior airflow performance or water resistance. They chose our drainable louvers for their **fine shadow lines**—and our willingness to accommodate.

To form the tower's clean, conical exterior with **textured visual breaks**, CS model A2097 louvers were curved into DNA-like helix structures and mounted in 10 perfectly contoured strips.

We're not used to being ogled. But having our louvers be among the first sights visitors see when they land in one of America's greatest cities? We could get used to that kind of attention.

Product A2097
Drainable Louver
See page 24 for details.

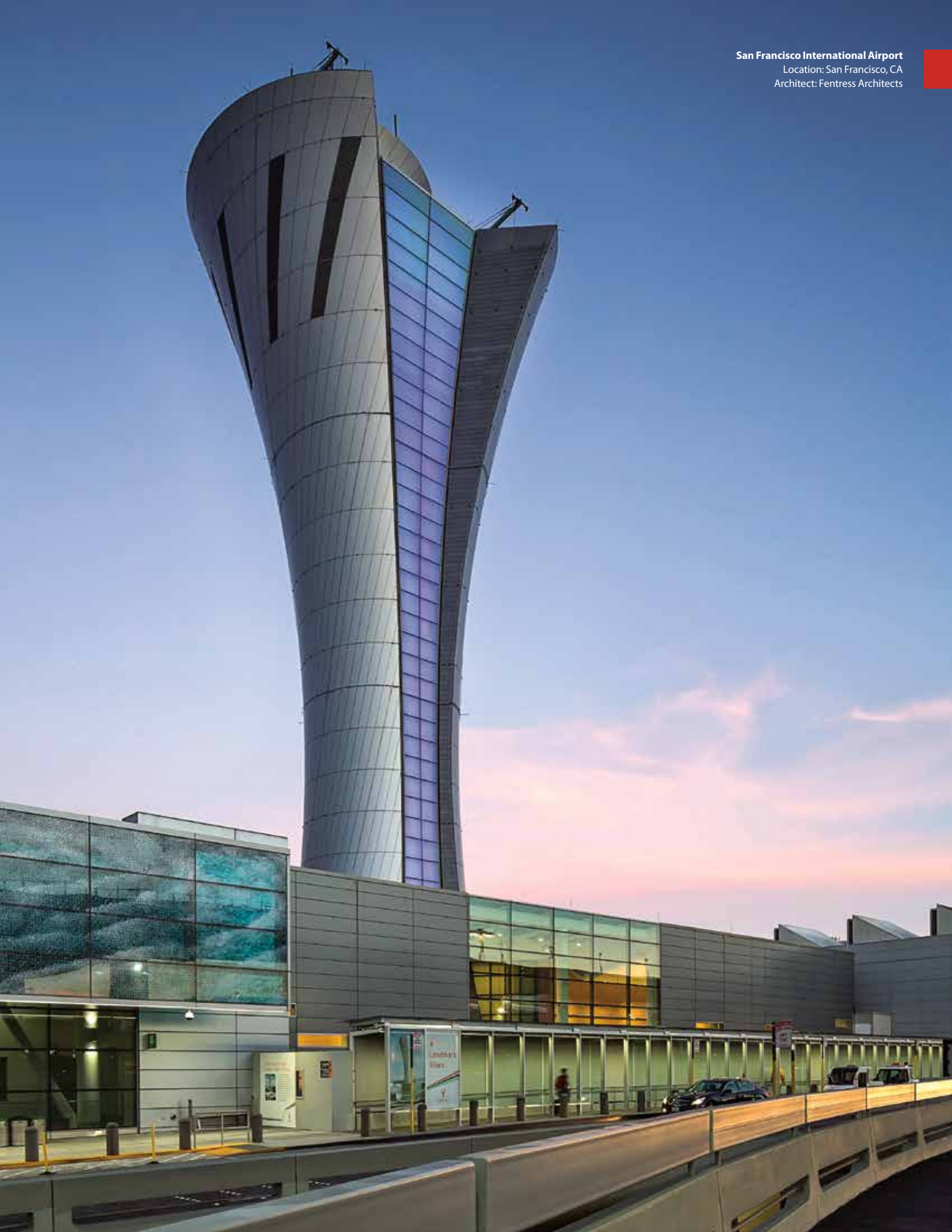

San Francisco International Airport
Location: San Francisco, CA
Architect: Fentress Architects

855 Avenue of the Americas
Location: New York, NY
Architect: Cook + Fox

Our high-performance louvers have gone undercover

While some louvers are all about standing out — others are more about blending in.

With Construction Specialties Perform Louvers, you get the air movement, security and sight-screening performance of our standard louvers, under the cover of a modern perforated aluminum skin. The first and only manufacturer to offer a fully concealed louver system that's been tested in accordance with BSRIA standards for air performance and water penetration, CS **turns louvers into a covert operation** that's proven to perform.

Unlike decorative mesh, which can harm mechanical equipment, Perform's perforated skin is engineered to work in harmony with the interior louver blades to provide unparalleled air intake and water-protection performance. We even offer a storm-resistant model.

Perform louvers are available to **integrate into any curtain wall system**. Whether you are working with a capture, butt-glazed or even custom directional reveal, CS can provide the solution. Perform Louvers mold to your design's character, either as a dramatic accent or subtle nuance.

Clean Construction. Camouflaged Air Flow.

At 855 Avenue of the Americas in Manhattan, design architect Cook + Fox used CS PL-5700 Storm-Resistant Perform Louvers to provide an airflow solution that also complements the building's unpretentious glass design through subtle bands at its top and bottom. So when the spirit of design is clean and unembellished, CS prefers to go incognito.

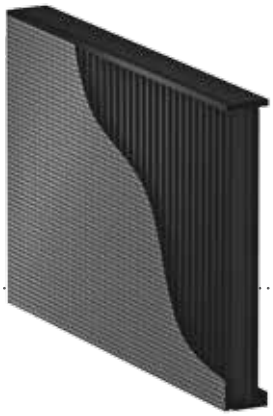

Product PL-5700
Storm-Resistant Louver
See page 21 for details.

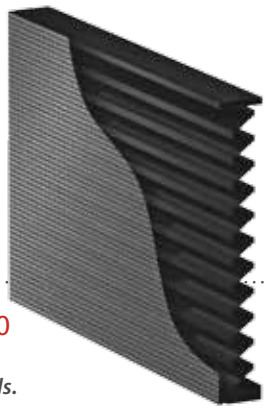

Product PL-4080
Conventional Louver
See page 25 for details.

Weather Considerations: Perform Louvers are not for use in areas where perforations may become blocked or clogged with snow, ice, debris or other occlusions. To maximize performance, prevent property damage and provide a safe environment, Perform Louvers should be inspected and maintained regularly.

Marlins Park
Location: Miami, FL
Architect: Populous

Marlins Park

Modern design built to withstand nature's wild pitches

When Construction Specialties was invited to become part of an abstract architectural artwork, we were intrigued. When that artwork had to withstand hurricane-force winds, **we were ready to play hardball**.

So, naturally, our contribution to Marlins Park, home field of the Miami Marlins baseball team, is our Miami-Dade County-certified extreme-weather, water-resistant DC-6174 louvers. What's more is that the evolving complexity of the design — a gleaming modern stadium combining white stucco, steel, aluminum and glass — required our team to make continuous engineering changes and conduct testing to ensure the louvers maintained **specified performance standards**.

The result: An elegant ballpark that combines baseball, art and a panoramic view of downtown Miami — and can withstand whatever curveballs the weather can throw at it.

Product DC-6174
Horizontal Louver
See page 22 for details.

Please see our stadium and arena brochure in the Literature section of our website or call 800.233.8493 to request a copy.

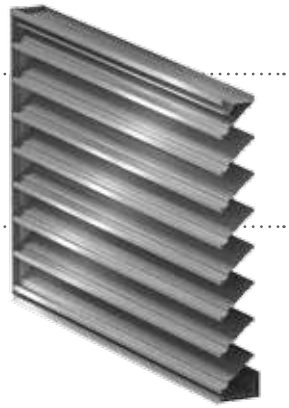

Are new codes holding you prisoner to vertical louvers?

Break free with the **new** AMCA 550-listed **horizontal** louver.

Construction Specialties recently introduced Dade County model DC-9614, one of the only horizontal louvers to pass the AMCA 550 test for use in all U.S. hurricane-prone coastal areas. The DC-9614 horizontal louver is A-rated for wind-driven rain and has a high free area (59%), which provides excellent airflow and low pressure drop. It also is AMCA 540-listed for enhanced wind-borne debris resistance.

Specify DC-9614 and never again be locked into vertical louvers in hurricane-prone areas.

C-SGROUP.COM/LOUVERS

DC-9614

Nemours/Alfred I. duPont Hospital for Children

Storm-resistant louvers prescribed for hospital renovation

Regarded as a world-renowned full-service children's hospital, the Nemours/Alfred I. duPont Hospital for Children in Wilmington, Delaware, began undertaking a renovation in 2008 that would help the facility — in both design and performance — live up to its prestigious status.

In doing so, architecture firm **FKP Architects turned to Construction Specialties and its RS-4600 Vertical Storm-Resistant Louvers**. For this uniquely designed building defined by a wavy profile and aquatic aesthetic, FKP oriented the vertical louvers — featuring CS's Seafoam Green fluoropolymer coating — across the exterior of the hospital's penthouse level, **accentuating the building's curves and blending in with the facility's smooth, multi-colored exterior**.

While FKP Architects primarily chose CS Louvers for aesthetic purposes, they were also critically important in optimizing performance. Since the penthouse area houses the facility's HVAC equipment and other mechanicals, the louvers form a continuous band that **not only conceals the interior but also contributes to improved air intake and flow for the entire building**. The louvers also improve air and smoke exhaust in case of fire emergencies in the hospital's often bustling atrium space.

The storm-resistant louvers also guard against any degree of wind-driven rain and moisture that tends to accumulate atop a six-story building in Wilmington, which experiences plenty of rainy and overcast days throughout the year. Further, when guests look up at the penthouse from the hospital's central atrium, they see louvers — not mechanicals.

For FKP Senior Project Designer and Senior Vice President Bob Clark, when tasked with a new design job that requires a blend of moisture protection and aesthetics, **CS products have become a staple of any project**. "CS Louvers have become the standard in our office," he said. "We try to design our own CS product more often than not."

Product RS-4600
Vertical Storm-Resistant Louver

C-SGROUP.COM/LOUVERS

Nemours/Alfred I. duPont Hospital for Children
Location: Wilmington, DE
Architect: FKP Architects

Photos Courtesy of Metalwerks

Boeing Delivery Center
Location: Charleston, SC
Architect: Calloway Johnson Moore & West PA

Photo credit ©James West/jwestproductions.com

Boeing Delivery Center

Collaboration helps launch weather-tight aircraft plant

Charming Charleston, South Carolina, is known for quaint cobblestone streets and pre-Civil War houses all situated on the Charleston Harbor, part of 90 miles of Atlantic coastline.

And now, it also will be known as the home of the new Boeing Delivery Center, a state-of-the-art aircraft paint facility that opened in 2016. The new 256,000-square-foot facility is 10 stories high and almost two football fields wide, big enough to house two Boeing 787 Dreamliners simultaneously.

But proximity to beaches and waterways also brings with it the inherent risk of exposure to hurricanes, tropical storms and other extreme weather. Protecting the precious cargo is the seamless integration of Construction Specialties DCH-5704 Extreme-Weather Louvers and CENTRIA Formawall® Dimension Series® Panels that creates a **continuous appearance as well as a water-tight solution**.

The more perfect union

Construction Specialties and CENTRIA have formed a unique partnership to share the design, manufacturing and innovation that has made each company a leader in its respective field. This collaboration ensures complete integration of CS Louvers into CENTRIA's Formawall® Dimension Series® architectural insulated metal panel systems, Formavue™ Windows and MetalWrap™ insulated composite backup panel systems.

Fully integrated CS Louver models are available in a variety of blade depths in both active and inactive louvers and include common joinery elements with CENTRIA wall panels to provide a seamless exterior façade. CS Louvers also can be integrated with MetalWrap™, a tested, high R-value insulated composite backup panel system, behind it for occupied areas. The thermally broken wall system acts as an air, water and vapor barrier.

All of our louvers have been tested to both AMCA and BSRIA test standards and are available in fixed, drainable and storm-resistant models with class-A ratings. And all can be finished in any of CENTRIA's colors.

Whether you choose a CENTRIA Formawall® metal panel system or MetalWrap™ backup panel system for your next project, we think you'll find that CS's high-performance integrated louver products will blow the competition away.

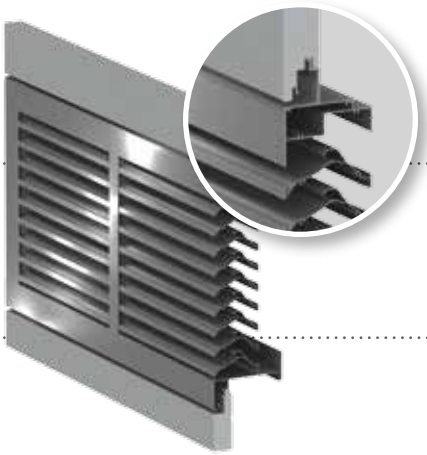

Product DCH-5704
Miami-Dade County-Approved 5-inch Storm-Resistant Impact Hurricane Louver
See page 22 for details.

CENTRIA

Please see our CS and CENTRIA integrated catalog in the Literature section of our website or call 800.233.8493 to request a copy.

In-house Louver Testing

Creating custom louvers is nothing new. Neither is testing them.

But doing both? That's our specialty.

Knowing how a louver will perform is critical to ensuring that it will stand up to real-life conditions on the job. Construction Specialties can verify how our products will perform because we have our own on-site test chamber that allows us to test to AMCA louver standards.

Not only has CS tested every standard louver we sell, but when you work with us to create a custom louver system, we'll test that, too. So you can be sure that it will meet your specific performance requirements.

Setting the standard

The CS on-site test chamber has the ability to replicate the AMCA test standards for air perfomance, still air water penetration and wind-driven rain.

- Our wind generator can simulate the equivalent of a Category 2 hurricane, with wind-driven rain speeds reaching up to 70 mph and producing up to 9 inches of water per hour.
- An intake fan runs constantly to simulate the building's air-handling equipment. So if water does get through to the collection chamber, we can make on-the-fly blade adjustments to augment water removal.

By evaluating a louver's resistance to water penetration at incremental speeds, we can prove that it will deliver the air intake and water removal performance you require once it's installed — no matter which CS Storm-Resistant Louver you pick.

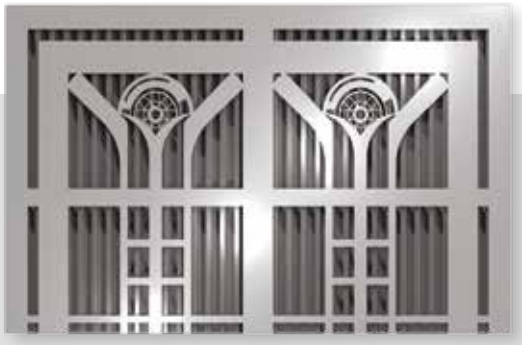

The Motor City hits the ice.

When you build in a historic and personal touch to your louver system, does it affect the performance? Little Caesars Arena, the new home of the iconic Detroit Redwings NHL franchise, wanted every detail to speak to the history of the city and team. Designing a custom wheel and hockey stick grille was the easy part. But how does it perform in conjunction with the louver? We didn't need to drop the gloves to verify this custom model's uncompromised wind-driven rain performance — we just had to challenge it in our state-of-the-art test facility.

AMCA-CERTIFIED MODELS*		
RS-2300	DC-4174	A4105–A4125
RS-4600	DC-5304	A4110–A4130
RS-4605	DCH-5704	A4115–A4135
RS-4700	DCV-5704	A6080–A6085
RS-5300	DC-6174	GS-410
RS-5605	A4097	GS-610
RSH-5700	A4177	BL-4089
RSV-5700	A6097	BL-4179
RS-7315	A6177	BLH-5709
RS-7705	A6155	BLV-5709
RS-8400	B5157	BL-6089
RS-8615	GS-407	BL-6179
RS-9615	GS-607	
B-6485	A4080–A4085	
B-7505	A4100–A4120	

AMCA-LISTED LOUVERS (MEETS AMCA 540 AND/OR AMCA 550)		
DC-6804	DC-9614	DC-5704 (AMCA 540 only)

*Construction Specialties, Inc. certifies that louver models listed are licensed to bear the AMCA seal. The ratings are based on tests and procedures performed in accordance with AMCA publication 511 and comply with requirements of the AMCA-certified ratings program. The AMCA-certified rating seal applies to both air performance and water penetration ratings.

Construction Specialties Powder Coatings

Responsible. Durable. Beautiful.

With Construction Specialties Louvers, you'll get the look you want, without compromising the environment or durability. You can count on our selection of powder-coat finishes for:

Sustainability

Years ago, we switched from conventional liquid fluoropolymer finishes to our current 20-year powder-coat formula because it contains no hazardous solvents, produces no hazardous waste and releases no volatile organic compounds.

The result? The elimination of 60 tons of hazardous solvent waste generated by our plants annually — and virtually no waste to end up in landfills. Our VOC-free powder-coat finish has received a non-toxic rating from the U.S. Environmental Protection Agency (EPA).

Durability

Our powder-coat finishes are harder, more durable and more scratch-resistant than conventional liquid fluoropolymer and polyester finishes — yet they cost the same. Backed by a 20-year warranty against flaking, chipping, peeling and fading, our powder-coat finishes are the most long-lasting available.

Custom Options

Design freedom means specifying the color you want — not one defined by the manufacturer's limitations. That's why we offer 20 standard colors in addition to custom color matching, if required. We also offer Kynar 500® resin-based finishes and Hylar® 5000 high-gloss metallic finishes in 20 colors.

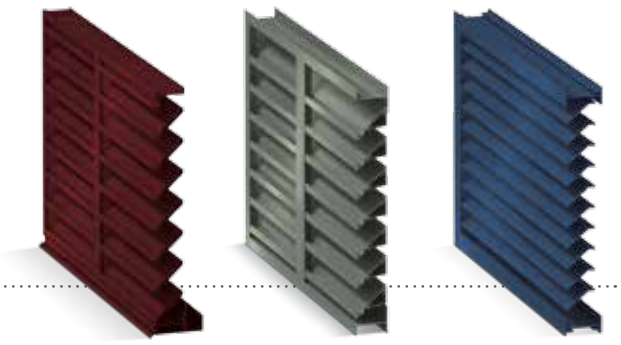

Wood Grain Patterns

CS Wood Grain Powder-Coat finishes provide a realistic wood aesthetic without the environmental drawbacks or the time-consuming maintenance associated with real wood. Our wood grain powder coat also features advanced scratch, fade and weather resistance. Choose from 15 standard wood grain patterns in a smooth or textured finish.

Soft Maple 001 | Hard Maple 002 | Douglas Fir 003 | Lyptus 004 | Warm Knotty Pine 005 | Regency Cherry 006 | Rosewood 007 | Vintage Oak 008

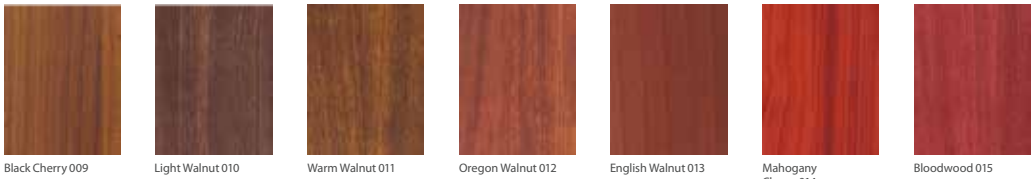

Black Cherry 009 | Light Walnut 010 | Warm Walnut 011 | Oregon Walnut 012 | English Walnut 013 | Mahogany Cherry 014 | Bloodwood 015

C-SGROUPCOM/LOUVERS

Storm-Resistant Louvers

Construction Specialties Storm-Resistant Louvers repel up to 100% of wind-driven rain. Available in both horizontal and vertical configurations, they are ideal when you:

- Need 100% resistance to wind-driven rain
- Expect winds as high as 50 mph that drive 8 inches of water per hour
- Must integrate the louvers into the building's total design or house them behind architectural grilles, detailing or continuous-line louvers
- Can't use a large plenum due to cost or space considerations
- Plan to house sensitive equipment adjacent to the louver system
- Need a louver to integrate with a CENTRIA Formawall® Dimension Series® insulated metal panel system

For design, technical or engineering assistance, contact our design team.
Download CAD details and specs for each louver at www.c-sgroup.com/louvers.

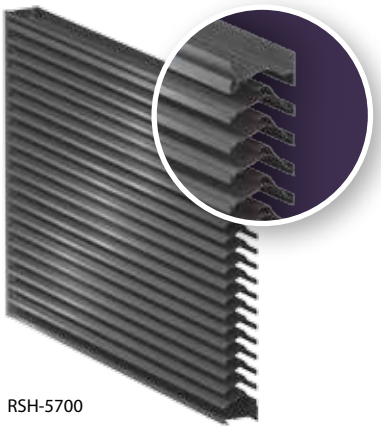

RSH-5700

2- to 5-Inch

LOUVER MODEL	CONFIG.	LOUVER DEPTH	BLADE SPACING	RAIN DEFENSE	FREE AREA		PD@ 900 FPM**
					4'x4'	8'x8'	
RS-5300	Mullion	5"	2¾"	💧💧💧💧	47.3%	51.5%	0.32
RSH-5700	Mullion	5"	2"	💧💧💧💧💧	45.8%	49.0%	0.13
RS-4700	Mullion	4"	1¾"	💧💧💧💧	51.6%	54.8%	0.27
RS-2300	Mullion	2"	1½"	💧💧💧	41.9%	44.0%	0.51

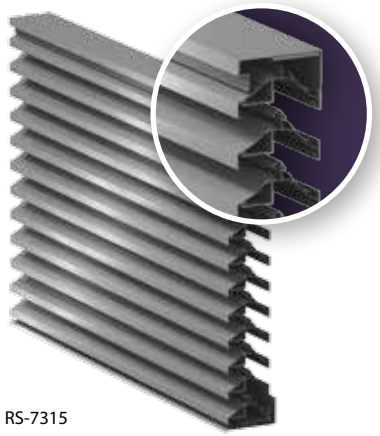

RS-7315

7-Inch

LOUVER MODEL	CONFIG.	LOUVER DEPTH	BLADE SPACING	RAIN DEFENSE	FREE AREA		PD @ 900 FPM**
					4'x4'	8'x8'	
RS-7705*	Cont. Line	7"	3⅛"	💧💧💧💧💧	50.0%	52.8%	0.25
RS-7315*	Cont. Line	7"	3⅞"	💧💧💧💧	50.6%	54.6%	0.23

*Modular capabilities with Blank Off for inactive areas.

RS-5605

Vertical

LOUVER MODEL	CONFIG.	LOUVER DEPTH	BLADE SPACING	RAIN DEFENSE	FREE AREA		PD @ 900 FPM**
					4'x4'	8'x8'	
RS-4600	Vertical	4"	3"	6	43.0%	46.6%	0.39
RS-4605	Vertical	4"	2"	6	53.3%	56.6%	0.25
RS-5605	Vertical	5"	1"	7	59.1%	62.9%	0.08
RSV-5700	Vertical	5"	2"	7	45.8%	49.0%	0.13

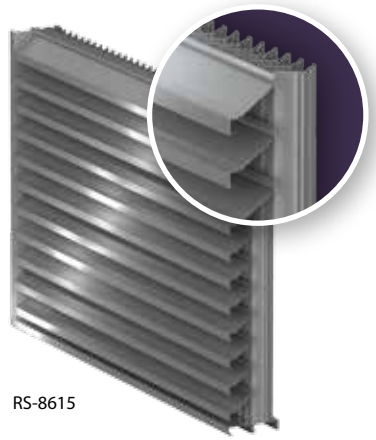

RS-8615

Combination Horizontal/Vertical

LOUVER MODEL	CONFIG.	LOUVER DEPTH	BLADE SPACING	RAIN DEFENSE	FREE AREA		PD @ 900 FPM**
					4'x4'	8'x8'	
RS-8615	Cont. Line	8"	4"	7	53.3%	56.6%	0.37
RS-9615	Cont. Line	9"	4"	7	59.1%	62.9%	0.28

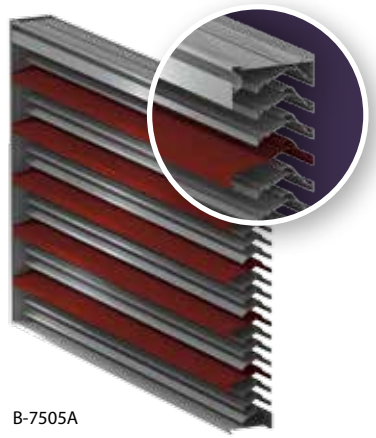

B-7505A

Bold Line

LOUVER MODEL	CONFIG.	LOUVER DEPTH	BLADE SPACING	RAIN DEFENSE	FREE AREA		PD @ 900 FPM**
					4'x4'	8'x8'	
B-7505	Mullion	7"	2"	6	45.8%	49.0%	0.12
B-7505A	Architectural Line	7"	2"	6	45.8%	49.0%	0.12

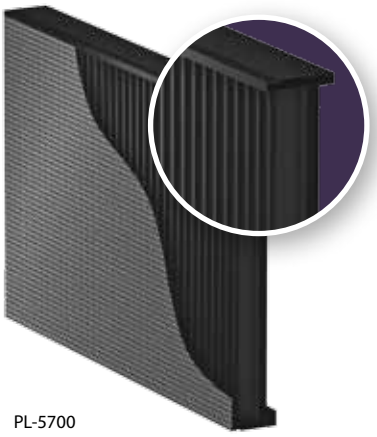

PL-5700

Perform

LOUVER MODEL	CONFIG.	LOUVER DEPTH	BLADE SPACING	RAIN DEFENSE	FREE AREA		PD @ 900 FPM**
					4'x4'	8'x8'	
PL-5700	Custom	7"	2"	6	44.5%	48.3	0.13

**Pressure drop @ feet per minute

Extreme-Weather Louvers

Construction Specialties Extreme-Weather Louvers are built to withstand extreme hurricane, tornado and tropical storm conditions. They are perfect when your building:

- Needs a louver that has passed the Miami-Dade County impact, pressure and cyclical test
- Requires total envelope protection from hurricanes — including up to 170 PSF wind loads, missile protection and 100% water penetration
- Will be subjected to extreme weather from hurricanes and tropical storms
- Needs a louver to integrate with CENTRIA Formawall® Dimension Series® insulated metal panel system

For design, technical or engineering assistance, contact our design team.
Download CAD details and specs for each louver at www.c-sgroup.com/louvers.

DC-4174

Drainable

LOUVER MODEL	CONFIG.	LOUVER DEPTH	BLADE SPACING	RAIN DEFENSE	FREE AREA		PD @ 900 FPM**
					4'x4'	8'x8'	
DC-4174*	Mullion/ Cont. Line	4"	3¼"	💧💧	55.0%	59.5%	0.13
DC-6174	Mullion/ Cont. Line	6"	5¾"	💧💧	57.6%	62.0%	0.14

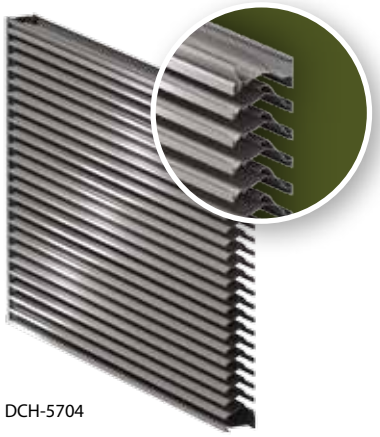

DCH-5704

Storm Resistant

LOUVER MODEL	CONFIG.	LOUVER DEPTH	BLADE SPACING	RAIN DEFENSE	FREE AREA		PD @ 900 FPM**
					4'x4'	8'x8'	
DC-5304	Mullion	5"	2¾"	💧💧💧💧💧	45.3%	51.0%	0.32
DCV-5704*	Mullion	5"	2"	💧💧💧💧💧💧	45.8%	49.0%	0.13
DCH-5704*	Mullion	5"	2"	💧💧💧💧💧	45.8%	49.0%	0.13

*Models available for CENTRIA Formawall Dimension Series

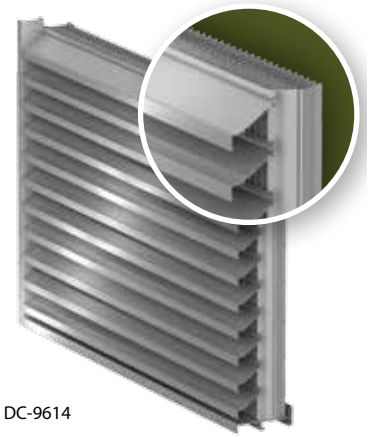

DC-9614

Continuous Storm Resistant AMCA 540/550

LOUVER MODEL	CONFIG.	LOUVER DEPTH	BLADE SPACING	RAIN DEFENSE	FREE AREA		PD @ 900 FPM**
					4'x4'	8'x8'	
DC-9614	Mullion	9"	4"	7	59.1%	62.9%	0.28

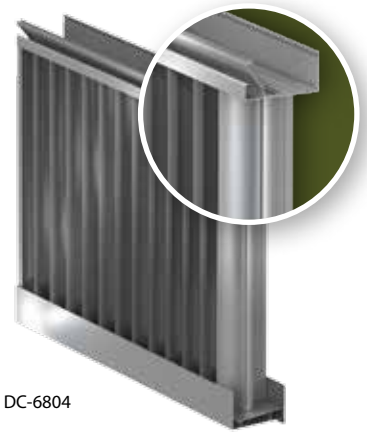

DC-6804

Vertical Storm Resistant AMCA 540/550

LOUVER MODEL	CONFIG.	LOUVER DEPTH	BLADE SPACING	RAIN DEFENSE	FREE AREA		PD @ 900 FPM**
					4'x4'	8'x8'	
DC-6804	Vertical	6"	1⅞"	7	38.4%	44.3%	0.09

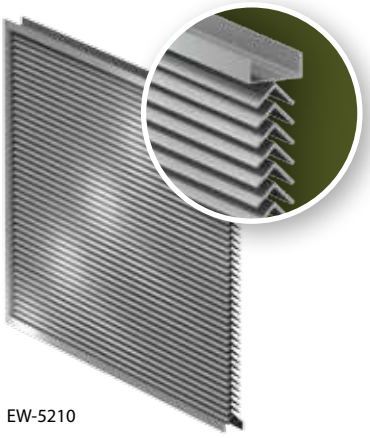

EW-5210

FEMA 361

LOUVER MODEL	CONFIG.	LOUVER DEPTH	BLADE SPACING	RAIN DEFENSE	FREE AREA		PD @ 900 FPM**
					4'x4'	8'x8'	
EW-5210	Horizontal	5"	2"	1	45.1%	51.3%	0.29

EW-5210 is tested to FEMA 361 and ICC 500 for use in Tornado- and Hurricane-Safe Rooms.

Standard Louvers

All Construction Specialties Standard Louvers are AMCA-certified and designed to provide high free area/ high airflow with low pressure drop. They are the right choice when you:

- Need an economical louver
- Don't mind occasional water entry from rain
- Want a wide variety of blade and frame styles and options
- Need a louver to integrate with a CENTRIA Formawall® Dimension Series® insulated metal panel system

For design, technical or engineering assistance, contact our design team.
Download CAD details and specs for each louver at www.c-sgroup.com/louvers.

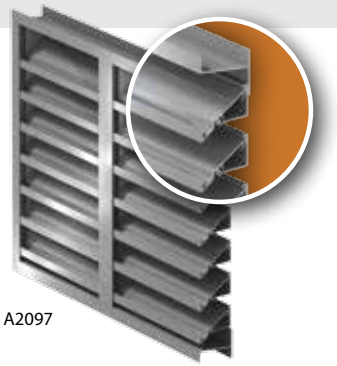

A2097

Drainable

LOUVER MODEL	CONFIG.	LOUVER DEPTH	BLADE SPACING	RAIN DEFENSE	FREE AREA 4'x4'	FREE AREA 8'x8'	PD @ 900 FPM*
A2097	Mullion/ Cont. Line	2"	1⅞"	💧	57.0%	59.7%	0.13
A4097	Mullion/ Cont. Line	4"	4"	💧💧	50.4%	58.0%	0.15
A6097	Mullion/ Cont. Line	6"	6"	💧💧	52.1%	60.1%	0.13
A4177	Mullion/ Cont. Line	4"	3¼"	💧💧	55.0%	59.5%	0.13
A6177	Mullion/ Cont. Line	6"	5¾"	💧💧	57.6%	63.2%	0.14

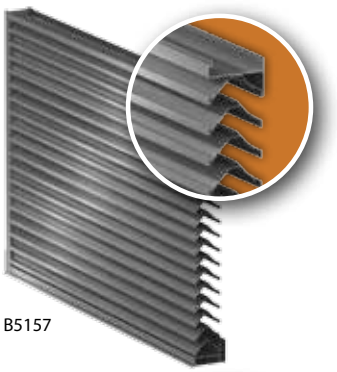

B5157

Drainable Sightproof

LOUVER MODEL	CONFIG.	LOUVER DEPTH	BLADE SPACING	RAIN DEFENSE	FREE AREA 4'x4'	FREE AREA 8'x8'	PD @ 900 FPM*
B5157	Mullion/ Cont. Line	5"	2½"	💧💧💧	52.6%	57.8%	0.33

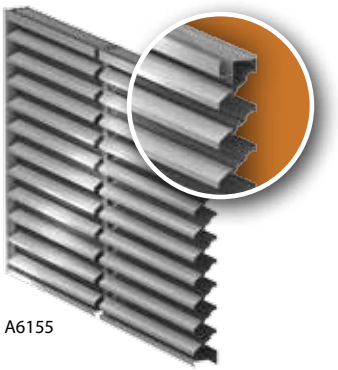

A6155

Double Drainable

LOUVER MODEL	CONFIG.	LOUVER DEPTH	BLADE SPACING	RAIN DEFENSE	FREE AREA 4'x4'	FREE AREA 8'x8'	PD @ 900 FPM*
A6155	Mullion/ Cont. Line	6"	5⅜"	💧💧	48.8%	54.3%	0.12

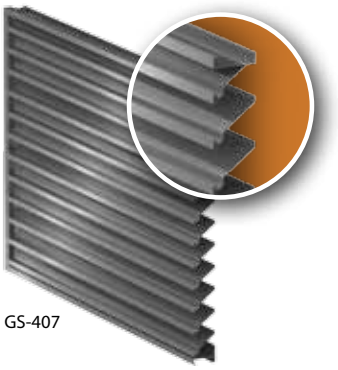

GS-407

Galvanized Steel/Drainable

LOUVER MODEL	CONFIG.	LOUVER DEPTH	BLADE SPACING	RAIN DEFENSE	FREE AREA 4'x4'	FREE AREA 8'x8'	PD @ 900 FPM*
GS-407	Mullion	4"	3⅞"	💧💧	52.5%	59.3%	0.13
GS-607	Mullion	6"	5⅜"	💧💧	52.8%	58.6%	0.13

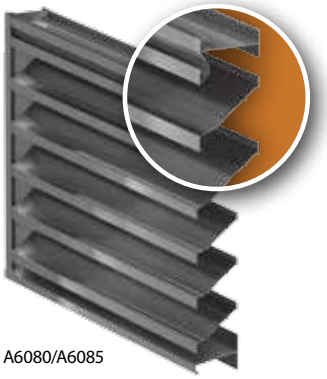

A6080/A6085

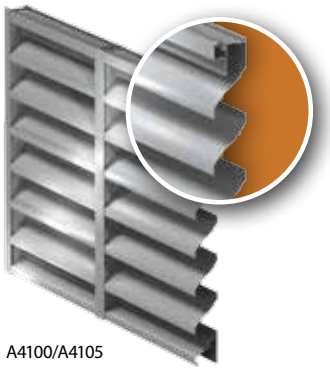

A4100/A4105

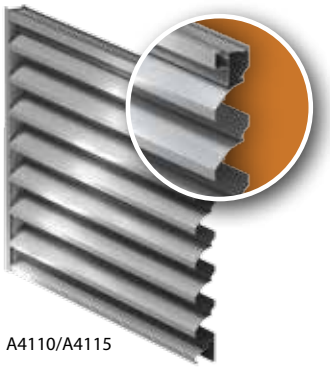

A4110/A4115

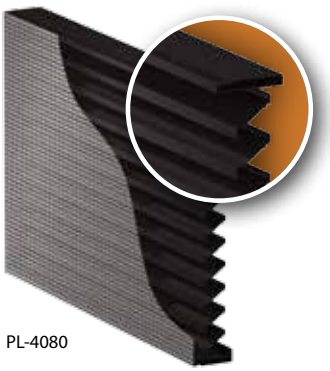

PL-4080

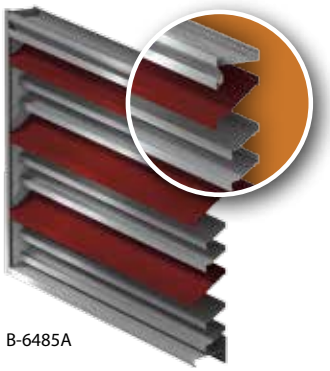

B-6485A

Non-Drainable

LOUVER MODEL	CONFIG.	LOUVER DEPTH	BLADE SPACING	RAIN DEFENSE	FREE AREA		PD @ 900 FPM*
					4'x4'	8'x8'	
A4080/ A4085	Mullion/Cont. Line	4"	4"		54.0%	59.9%	0.15
A4100/ A4105	Mullion/Cont. Line	4"	6"		46.0%	52.3%	0.16
A4110/ A4115	Mullion/Cont. Line	4"	6"		46.6%	52.7%	0.17
A4180	Mullion/Cont. Line	4"	4⅛"		25.6%	28.8%	0.35
A6080/ A6085	Mullion/Cont. Line	4"	4"		54.0%	59.9%	0.15
A6100/ A6105	Mullion/Cont. Line	6"	6 13/16"		48.0%	54.4%	0.15
A6110/ A6115	Mullion/Cont. Line	6"	6 13/16"		48.0%	54.4%	0.15

Galvanized Steel/Non-Drainable

LOUVER MODEL	CONFIG.	LOUVER DEPTH	BLADE SPACING	RAIN DEFENSE	FREE AREA		PD @ 900 FPM*
					4'x4'	8'x8'	
GS-410	Mullion/Cont. Line	4"	4½"		42.5%	48.4%	0.12
GS-610	Mullion/Cont. Line	6"	6¼"		43.8%	50.4%	0.11

Perform

LOUVER MODEL	CONFIG.	LOUVER DEPTH	BLADE SPACING	RAIN DEFENSE	FREE AREA		PD @ 900 FPM*
					4'x4'	8'x8'	
PL-4080	Custom	7"	4"		46.8%	48.3%	0.16

Bold Line

LOUVER MODEL	CONFIG.	LOUVER DEPTH	BLADE SPACING	RAIN DEFENSE	FREE AREA		PD @ 900 FPM*
					4'x4'	8'x8'	
B-6485M	Mullion	6"	4"		52.9%	58.7%	0.16
B-6485A	Architectur-al Line	6"	4"		52.9%	58.7%	0.16

*Pressure drop @ feet per minute

Blast-Resistant Louvers

Construction Specialties Blast-Resistant Louvers provide blast protection, air movement and rain defense all rolled into one. They are the right choice for buildings that:

- Are particularly vulnerable to explosive threats, such as government buildings, data centers and power plants
- Must withstand blast loads up to 12 PSI
- Must meet the government requirement that a louver must remain in its frame and anchored to resist a blast and prevent it from becoming a projectile

For design, technical or engineering assistance, contact our design team.
Download CAD details and specs for each louver at www.c-sgroup.com/louvers.

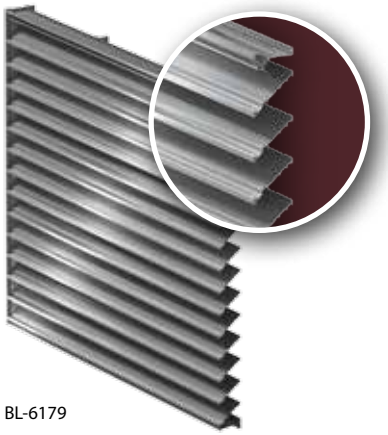

BL-6179

Non-Drainable

LOUVER MODEL	CONFIG.	LOUVER DEPTH	BLADE SPACING	RAIN DEFENSE	FREE AREA		PD @ 900 FPM*
					4'x4'	8'x8'	
BL-4089	Mullion/ Cont. Line	4"	4"	💧💧	54.0%	59.9%	0.15
BL-6089	Mullion/Cont. Line	4"	4"	💧💧	54.0%	59.9%	0.15

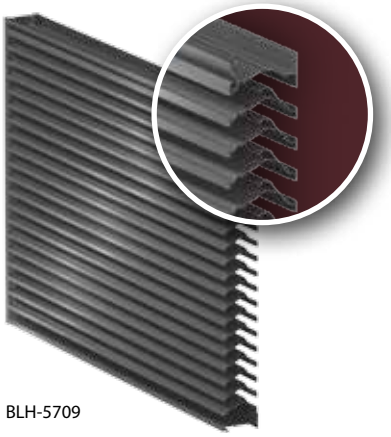

BLH-5709

Drainable

LOUVER MODEL	CONFIG.	LOUVER DEPTH	BLADE SPACING	RAIN DEFENSE	FREE AREA		PD @ 900 FPM*
					4'x4'	8'x8'	
BL-6179	Mullion/ Cont. Line	6"	5¾"	💧💧	57.6%	63.2%	0.14
BL-4179	Mullion/ Cont. Line	4"	3¼"	💧💧	55.0%	59.5%	0.13

Storm Resistant

LOUVER MODEL	CONFIG.	LOUVER DEPTH	BLADE SPACING	RAIN DEFENSE	FREE AREA		PD @ 900 FPM*
					4'x4'	8'x8'	
BLH-5709	Mullion	5"	2"	💧💧💧💧💧💧	45.8%	49.0%	0.13

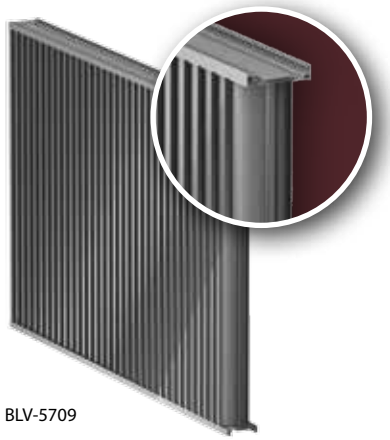

BLV-5709

Vertical Storm Resistant

LOUVER MODEL	CONFIG.	LOUVER DEPTH	BLADE SPACING	RAIN DEFENSE	FREE AREA		PD @ 900 FPM*
					4'x4'	8'x8'	
BLV-5709	Vertical	5"	2"	💧💧💧💧💧💧	45.8%	49.0%	0.13

Construction Specialties Thinline Louvers offer a shallow, low-profile blade design, much like a grille or a grate. They are the right choice when you:

- Need high airflow
- Want to cover small areas, such as individual HVAC vents
- Don't require water performance
- Desire a uniform, tightly spaced louver that blends in with other exterior materials

For design, technical or engineering assistance, contact our design team.
Download CAD details and specs for each louver at www.c-sgroup.com/louvers.

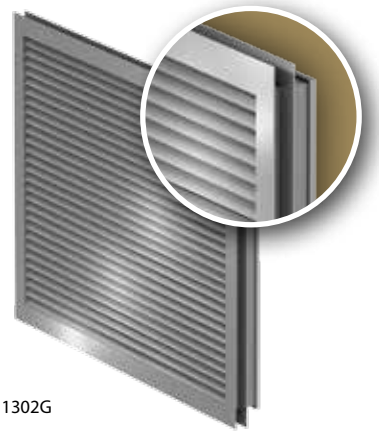

1302G

Thinline Louvers

LOUVER MODEL	CONFIG.	LOUVER DEPTH	BLADE SPACING	RAIN DEFENSE	FREE AREA 4'x4'	FREE AREA 8'x8'	PD @ 900 FPM*
1302G	Cont. Line	1⅜"	¾"	💧	59.8%	62.7%	0.09
RS-2300	Storm Resistant	2"	1½"	💧💧💧💧	42.1%	44.4%	0.51

2252

Thinline Louvers

LOUVER MODEL	CONFIG.	LOUVER DEPTH	BLADE SPACING	RAIN DEFENSE	FREE AREA 4'x4'	FREE AREA 8'x8'	PD @ 900 FPM*
2252	Cont. Line	2¼"	3"	💧	35.2%	37.8%	0.12
A2097	Cont. Line	2"	1⅞"	💧	55.3%	58.0%	0.13

*Pressure drop @ feet per minute

Acoustical Louvers

Construction Specialties Acoustical Louvers offer good water penetration protection and airflow performance with excellent sound attenuation for parking garages, tunnels, mechanical rooms, cooling towers or any application where ventilation is needed. Choose an Acoustical Louver when you:

- Need to minimize sound levels that escape from exterior or interior walls
- Require maximum noise reduction — specify model A-12350
- Need maximum free area and noise reduction — specify model A-8890 or A-8860

For design, technical or engineering assistance, contact our design team.
Download CAD details and specs for each louver at www.c-sgroup.com/louvers.

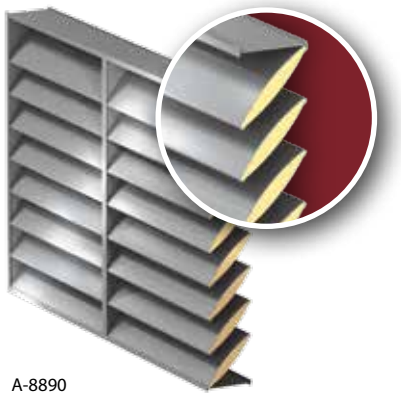

A-8890

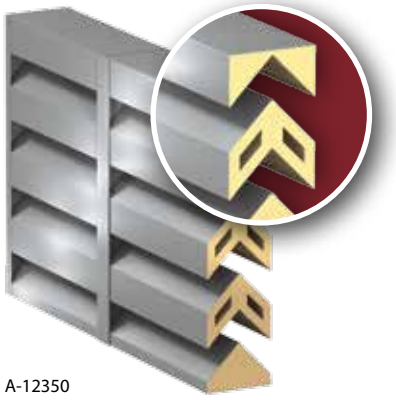

A-12350

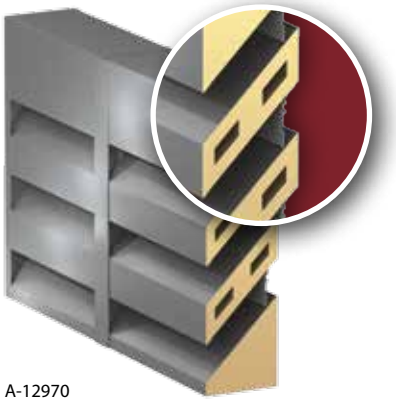

A-12970

Acoustical

LOUVER MODEL	CONFIG.	LOUVER DEPTH	BLADE SPACING	RAIN DEFENSE	FREE AREA		PD @ 900 FPM*
					4'x4'	8'x8'	
A-6370	Mullion	6"	10"	💧💧	21.6%	25.4%	0.09
A-8370	Mullion	8"	8½"	💧💧	23.0%	30.0%	0.07
A-8890	Mullion	8"	6"	💧💧	28.5%	33.9%	0.06
A-12350	Mullion	12"	11¾"	💧💧	23.3%	32.4%	0.17
A-12360	Mullion	12"	15"	💧💧	24.3%	31.7%	0.09
A-12370	Mullion	12"	12"	💧💧	22.0%	26.6%	0.07

Operating Acoustical

LOUVER MODEL	CONFIG.	LOUVER DEPTH	BLADE SPACING	RAIN DEFENSE	FREE AREA		PD @ 900 FPM*
					4'x4'	8'x8'	
A-12970	Mullion	12"	12"	💧💧	22.0%	26.6%	0.06
A-8860	Mullion	9½"	6"	💧💧	28.5%	33.9%	0.06

Operating Louvers

Construction Specialties Operating Louvers are adjustable and can be opened and closed to control airflow by an actuator device. Perfect for mechanicals rooms with emergency generators, choose them when you:

- Need the ability to close the louvers to keep weather out
- Need the ability to open the louvers to let exhaust out or facilitate air intake
- Must provide security from external intrusion
- Must be able to close the louver but have a fixed blade appearance — specify model 6917

For design, technical or engineering assistance, contact our design team.
Download CAD details and specs for each louver at www.c-sgroup.com/louvers.

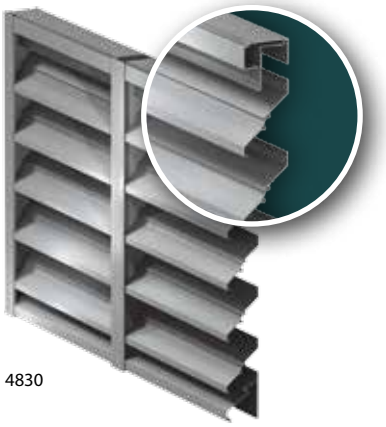

4830

Operating

LOUVER MODEL	CONFIG.	LOUVER DEPTH	BLADE SPACING	RAIN DEFENSE	FREE AREA		PD @ 900 FPM*
					4'x4'	8'x8'	
4830	Mullion	4"	5⅝"		33.1%	37.1%	0.12
6870	Mullion	6"	5⅝"		53.2%	63.5%	0.10

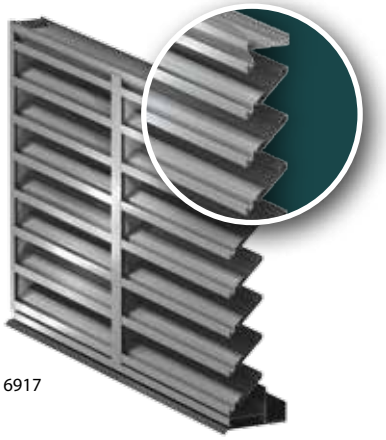

6917

Drainable Operating

LOUVER MODEL	CONFIG.	LOUVER DEPTH	BLADE SPACING	RAIN DEFENSE	FREE AREA		PD @ 900 FPM*
					4'x4'	8'x8'	
6917	Mullion	6"	6³⁄₁₆"		40.7%	49.3%	0.18

C-SGROUP.COM/LOUVERS

*Pressure drop @ feet per minute

Construction Specialties®

CS creates products that solve complex building challenges around the world:

- Acrovyn by Design®
- Acrovyn® Doors & Frames
- Acrovyn® Wall Panels
- Acrovyn® Wall Protection
- Architectural Louvers
- Cubicle Curtains & Track
- Entrance Flooring
- Expansion Joint Covers
- Grilles & Vision Barriers
- Specialty Venting
- Sun Controls

49 Meeker Avenue

Cranford, New Jersey 07016 U.S.A.
800.631.7379

895 Lakefront Promenade
Mississauga, Ontario L5E 2C2 Canada
888.895.8955

www.c-sgroup.com

© Copyright 2016 Construction Specialties, Inc.
Construction Specialties, Inc. reserves the right to make design changes or to withdraw any design without notice.
Construction Specialties, Inc. holds a patent(s) on one or more of the products listed herein.
For detailed patent information, see www.c-sgroup.com/patents.
The LEED® certification trademark is owned by the U.S. Green Building Council and is used with permission.
Printed in U.S.A. Series 17

MIX
Paper from responsible sources
FSC® C103525