**2017** 10 82 00

CS™ Grilles

Construction Specialties®

ARCHITECTURAL GRILLES AND VISION BARRIERS

# PATTERNS *of* INSPIRATION

# Let the colors, shapes and textures of Construction Specialties Architectural Grilles and Vision Barriers inspire your next design.

Architectural Grilles and Vision Barriers by Construction Specialties have been capturing the imaginations of architects by adding **depth** and **dimension** to buildings for more than 50 years. **Both functional and decorative**, architectural grilles and vision barriers can change the entire personality of a building. Turn a wall from drab to dramatic. Conceal mechanicals in plain sight with bold shapes and colors. Make a parking garage memorable. The possibilities are endless.

And with 25 different patterns and **unlimited color options**, there's at least one CS Architectural Grille or Vision Barrier that's sure to inspire you.

**Contact us today at 800.631.7379 to talk about your next project.**

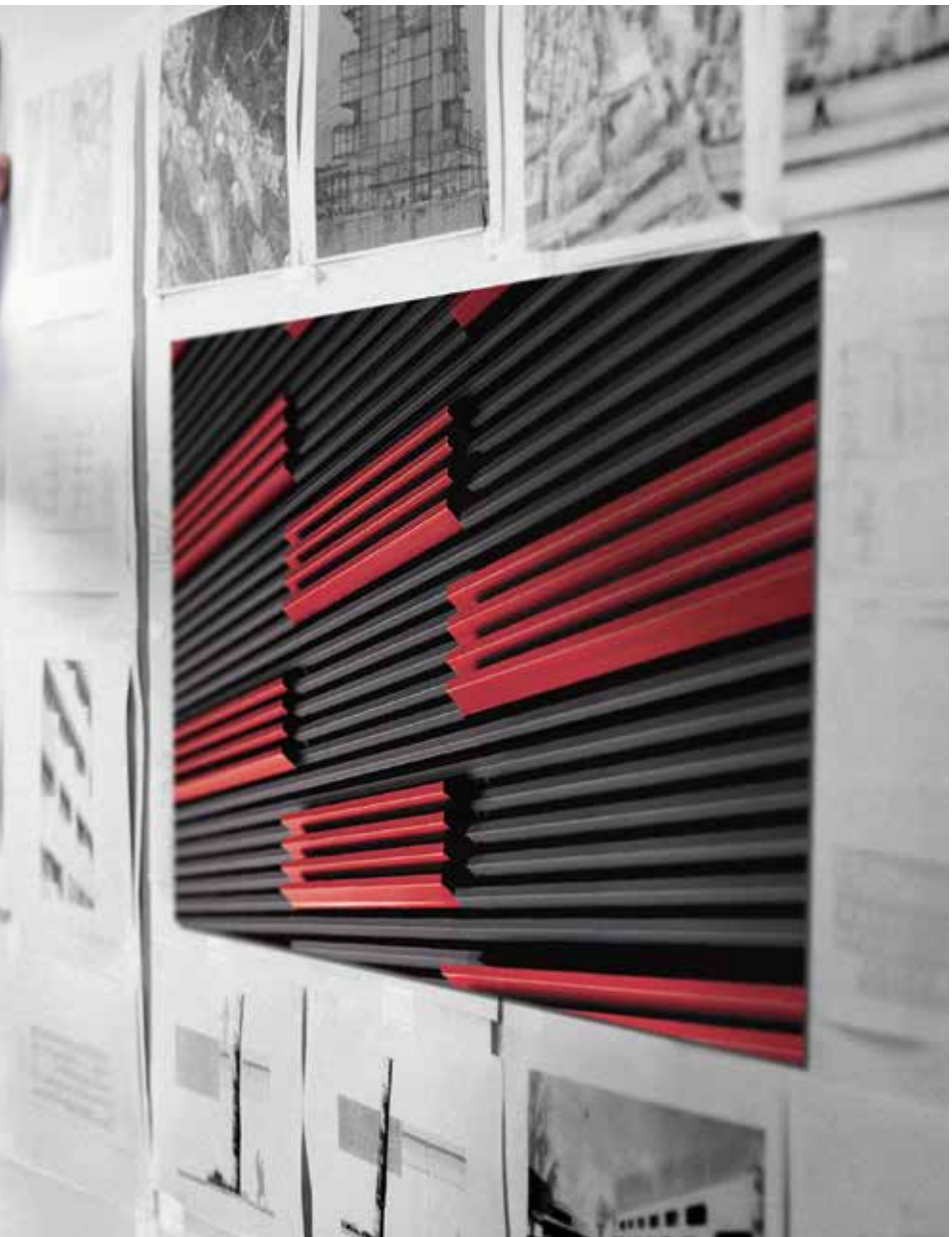

**Bold Line Screening Systems**

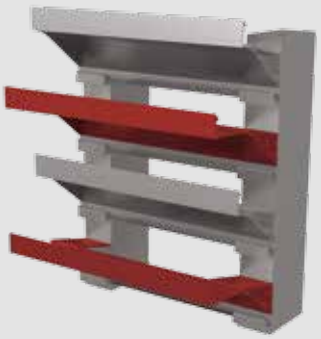

## Defy boring

Add exciting color, dimension and **texture** to parking garages, mechanical equipment barriers and virtually any screenwall project.

**SEE PAGE 20 FOR MORE DETAILS.**

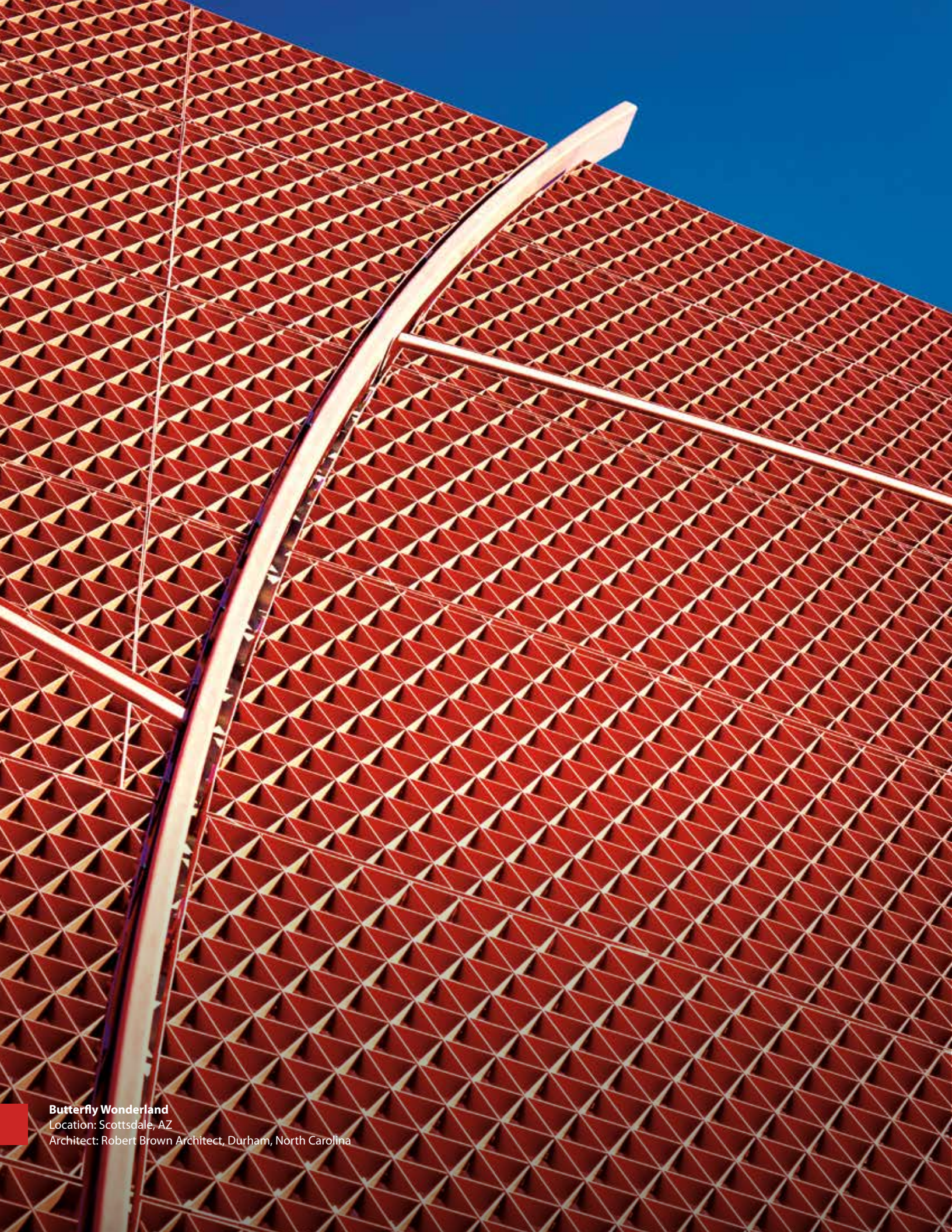

**Butterfly Wonderland**
Location: Scottsdale, AZ
Architect: Robert Brown Architect, Durham, North Carolina

Butterfly Wonderland

# Drama emerges in three dimensions

The exterior design for Butterfly Wonderland had to impart the sense of wonder and whimsy that would befit America's largest butterfly atrium. Although the original specifications called for a basic perforated mesh sheet metal for the building's façade, the architects determined that the product was too one-dimensional and did not add enough depth or texture.

They chose Construction Specialties' **Marquis Geometric Grille** with a custom powder-coat finish to complement the brick walls and provide the right balance between the heavy metal asymmetrical accents and patterns. This **challenging installation** required our engineering team to design a grid system for an entire wall that could be mounted and accessed only from the front.

Geometric grilles enabled the atrium's metamorphosis by transforming the entire façade.

## **Product** Marquis

The Marquis pattern of X's and diamonds, along with asymmetrical accents, adds texture, drama and visual interest that changes with the movement of the sun and the angle at which it is viewed.

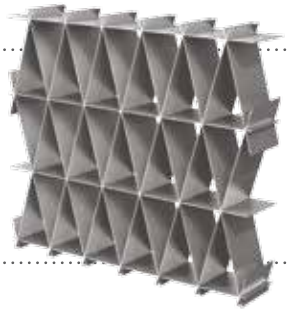

Wichita Area Technical College
National Center for Aviation

# Beauty and grace take flight

When the architects wanted a **linear profile** to give this airline pilot training facility a more modern, aeronautic aesthetic, they chose Construction Specialties' Vert-A-Cade® 304. The product's thin blade profile adds **visual interest** and provides clear, **open sightlines**.

The contoured grilles provide an appealing contrast to the wing-shaped roofline, yet blend harmoniously with the wide expanses of glass, adding a light, airy and inviting appearance. The horizontal blades have an added bonus of helping to **reduce sun glare and heat gain** like a sunshade.

The blade profile adds a strong, metal-dominant exterior that gets its lift from clean, graceful lines.

## **Product** Vert-A-Cade® 304

Although traditionally used on rooftops as a vision barrier for mechanical equipment, the Vert-A-Cade line is graceful enough to hang with the decorative grilles. Manufactured from extruded aluminum in numerous blade styles, the Vert-A-Cade line is long-lasting, cost-effective and attractive, and requires little maintenance.

**WATC – National Center for Aviation**
Location: Wichita, KS
Architect: Schaeffer Johnson Cox Frye

**Consolidated Rental**
Location: Fort Lauderdale, FL
Architect: Spillis Candela DMJM, Coral Gables, Florida

Consolidated Rental

# Parking garage as artwork

Florida state code says that parking structures must not look like parking structures. The architect took that requirement one step further by using standard architectural grille products in custom orientations to construct a parking garage that looks more like urban sculpture.

Three Construction Specialties Architectural Grille products combine to provide varying **widths**, **depths** and **free area** for adequate air exchange. The horizontal and vertical installation of more than 100,000 feet of decorative grilles adds a clean, **artistic** and three-dimensional aesthetic to what otherwise would be bare concrete.

Many of our grilles are well-suited for parking structures because of their **ventilation and vision control** properties. And we have extensive experience designing screening systems to satisfy specific parking garage **code requirements**, such as free area, seismic load and fire resistance.

With decorative grilles, you may never look at a parking garage the same way again.

**Products** Vert-A-Cade® 8000, Vert-A-Cade 304, Myriad Continuous

The Vert-A-Cade line is ideal for parking garages because its A-shaped profile adds strength, which translates into excellent spanning ability — more than double that of most profiles. Vert-A-Cade® parking screens can extend up to 12 feet, requiring no extra steel supports between the openings of each deck.

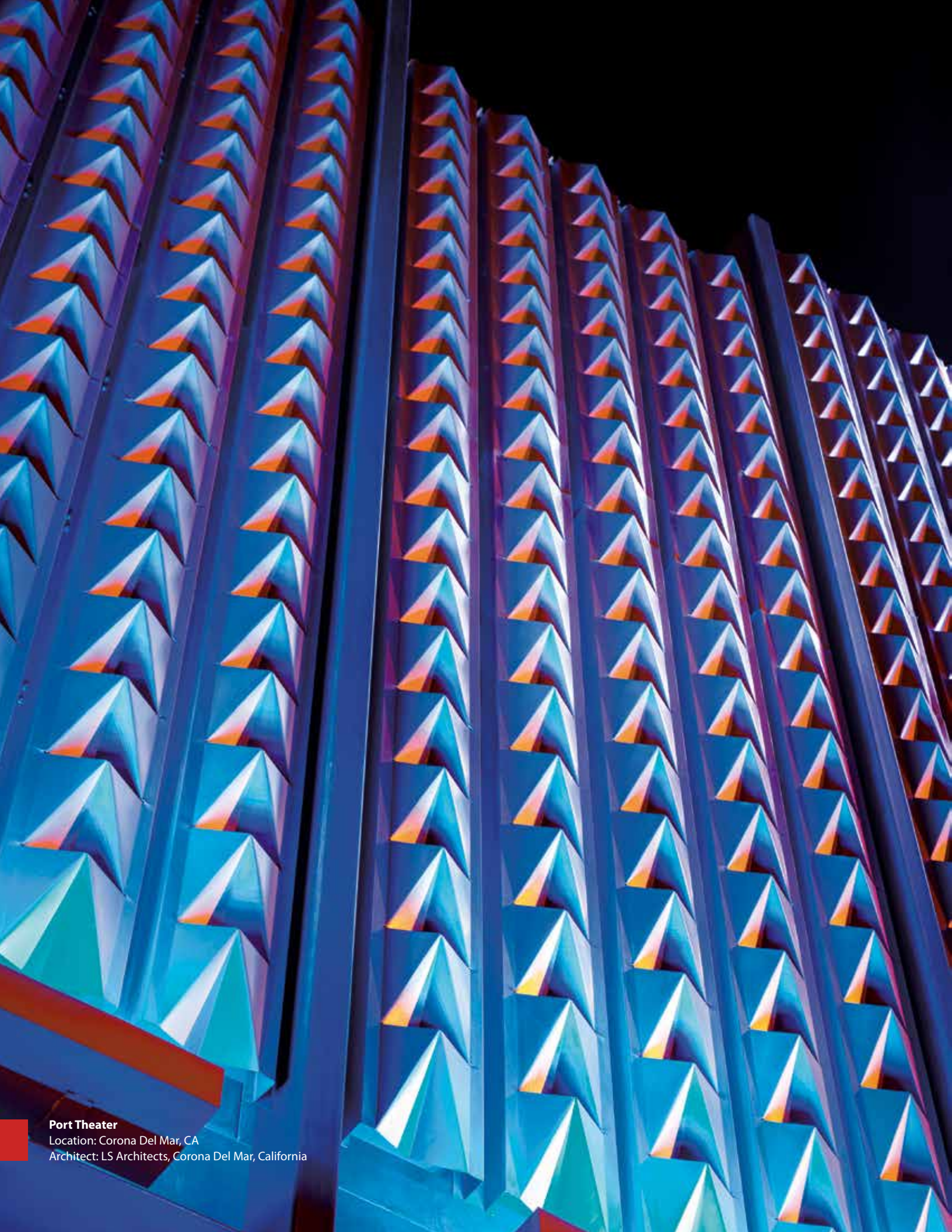

**Port Theater**
Location: Corona Del Mar, CA
Architect: LS Architects, Corona Del Mar, California

Port Theater

# A fresh new face

The Port Theater, which opened in the '50s, was slated for demolition in the '90s before a renovation and refurbishment recently returned the building to its former splendor — and then some. And what better way to show a flair for the dramatic than with one of Construction Specialties' most **daring** and **dimensional grille** profiles: Alumatex Tweed.

By day, 12-inch-wide silver powder-coated vertical columns of Alumatex Tweed defy the mainstream with 3-inch-deep triangular patterns. By night, trays of blue LED pocket lights illuminate the columns from below to transform the colors running upward and cast **theatrical shadows**.

The combination of texture and light creates a Pacific Coast star that's ready for its close-up.

## **Product** Alumatex Tweed

With its strong, angular shape, Almumatex Tweed — and its sister product Alumatex Madras — can span up to 12 feet deep in vertical panels with minimal rear substructure needed. Reduced substructure means less weight and less labor, which add up to a cost-effective way to add texture and span.

**Vista Grande**
Location: Miami, FL
Architects: Corwil Architects Inc., Coral Gables, Florida

Vista Grande Apartments

# Brand-new goes retro

Architectural grilles and panels make this new construction project fit right in with the established buildings in the vibrant, quirky Miami Modern district. A **soft, subtle** line of Vert-A-Cade® 304 vertical blades with bright- and pastel-colored horizontal panels adds **visual interest** that separates the parking garage from the residential apartments above.

Adding to the **on-trend design** of the screenwall is its dual **tilt angles** that pitch the structure up and out, which required our engineers to create a **custom-designed substructure**.

Vertical blades and colored panels add a fun, youthful vibe that helps make this senior high-rise a cool place to live.

## **Product** Vert-A-Cade® 304

With its soft, subtle line and high free area, the Vert-A-Cade® line never looks heavy, always allows adequate ventilation, and provides both horizontal and vertical orientations with a wide variety of blade depths and angles. Conceal or reveal — it's completely up to you.

C-SGROUP.COM/GRILLES

Bill & Melinda Gates Computer Science Complex
and Dell Computer Science Hall

# Smart design to inspire smart people

What's a more appropriate design to stimulate the intellectual pursuits of computer science researchers, faculty and students than a building that's light, open and **linear**? The architect selected Construction Specialties' Modular grille in a burnt-orange finish to provide a **geometric accent** that enhances the Spanish-Mediterranean flavor of the building's cast limestone and Texas brick.

More **subtle** than a traditional sun shade product but just as effective, the open-cell Modular screens add a **contemporary** flair while offering protection from the intense Texas sunshine, contributing to the building's LEED® silver rating for sustainable design. The complex's primary gathering place is a spectacular five-story glass atrium with wood finishes and a grand staircase, complemented by the dramatic interior views of the **light-diffusing grilles** that cast **evocative shadows** throughout the day.

Outside-the-box thinking provided the algorithm for pairing beauty with functionality in this creative application.

## **Product** Modular

Offering varying depths for both the horizontal and vertical blades, Modular can be customized for a unique aesthetic that will provide any amount of light — or shade — you desire.

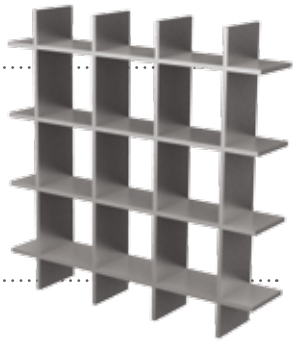

**Bill & Melinda Gates Computer Science Complex and Dell Computer Science Hall**
Location: Austin, TX
Architect: Pelli Clarke Pelli Architects, New Haven, Connecticut/STG Design, Austin, Texas

# GEOMETRIC GRILLES

Construction Specialties Geometric Grilles give you **countless options** for expressing your design vision with **patterns, colors and customization**. Grilles also provide a beautiful, environmentally responsible and economic alternative for renovating existing building façades. Grilles come as a completely engineered linear blade system that mounts to any surface, allowing you to cover glass, brick, concrete or any façade while allowing light and air to filter through. They're equally beautiful as **decorative detailing** or as functional sun shading.

## Myriad Circular

This circular grille allows air to move freely through the opening. Available in 0-, 30- and 40-degree slopes.

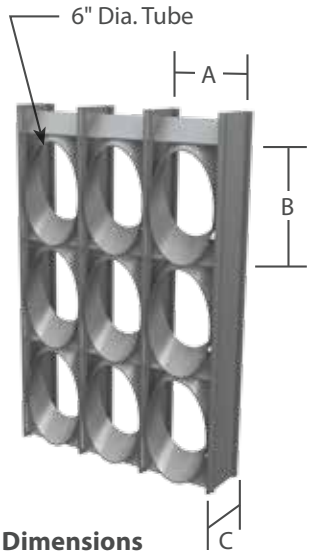


### Dimensions

**A:** Cell width:
6 1/8" on center
**B:** Cell height:
8 1/2" on center
**C:** Cell depth: 4 1/2"

## Lattice

Intersecting blades create a lattice effect. Blade spacing can be varied to change pattern, or the grille can be rotated at a 45-degree angle for a totally different effect. Wide selection of frames available.

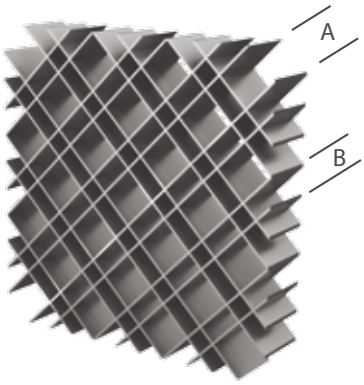


### Dimensions

**A:** Spacing between rows:
3" to 12"
**B:** Spacing of double blades:
2" minimum

Blade thickness: 0.125"

## Marquis

The Marquis diamond pattern with interlocking bar grilles can be used in a wide range of architectural applications, and is available in a variety of sizes and depths.

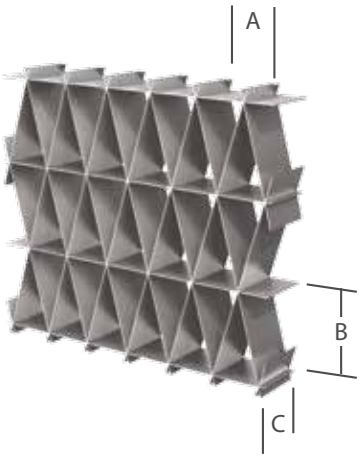


### Dimensions

**A:** Cell width: 7" to 16"
**B:** Cell height: 2" to 6"
**C:** Cell depth: 2" to 6"

Bar thickness: 0.081" and 0.125"

For design, technical or engineering assistance, contact our design team.
Download CAD details and specs for each grille at **www.c-sgroup.com/grilles/geometric**.

## Medallion

The Medallion decorative grille is available in various tube sizes and with round or square rosettes at the center. Specify individual or multiple medallions in a single frame. Grille features conceal welded construction.

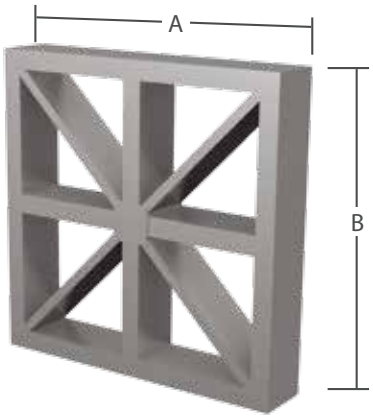


### Dimensions

**A:** Cell width: 1' to 7'
**B:** Cell height: 1' to 7'

## Modular

Modular features customizable squares and rectangles in countless module sizes and depths.

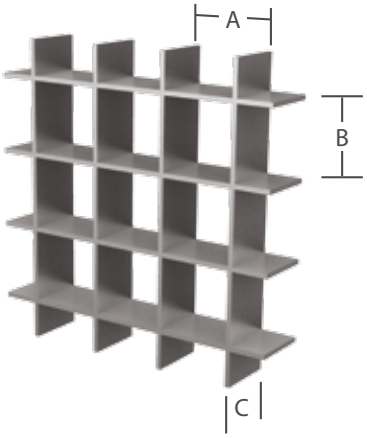


### Dimensions

**A:** Cell width: 2" to 12"
**B:** Cell height: 2" to 12"
**D:** Cell depth: 2" to 6"

Blade tilt: 0° to 45°

Interlocking bars thickness: 0.081" and 0.125"

## Modular Bold Line

The Modular Bold Line is a T-bar grille that creates bold shadow lines and serves as an excellent decorative screen.

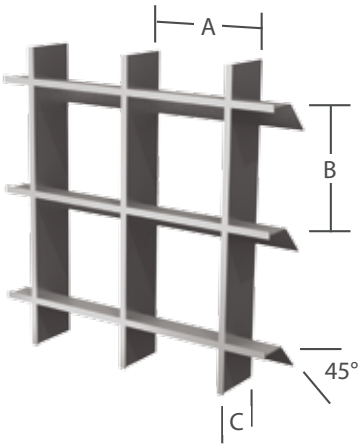


### Dimensions

**A:** Cell width: 3" to 12"
**C:** Cell height: 3" to 12"
**B:** Cell depth: 3"

Blade width: 0.375" 45° tilt

## Myriad Continuous

This structurally sound continuous bar grille with variable blade tilt offers excellent sight cut-off. Increase mullion depth for greater span.

### Dimensions

**A:** Cell width: 4" to 12"
**B:** Cell height: 2" to 12"
**C:** Cell depth: 2.5"
Varies based on wind loading requirements

Blade depth: 1.5"
Blade tilt: 0° to 45°

## Myriad Diamond

Excellent as a vision barrier or decorative grille, Myriad Diamond is offered in many cell sizes and shapes. Specify contrasting finishes on blades or mullions to create dramatic effects.

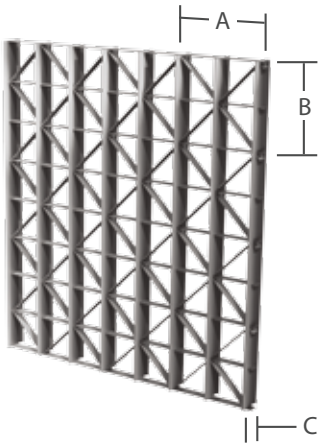


### Dimensions

**A:** Cell width: 4" to 12"
**B:** Cell height: 4" to 12"
**C:** Cell depth: 3.75"
Varies based on wind loading requirements

Blade thickness: 0.081"
Frame thickness: 0.125"

## Myriad Staggered

Myriad Staggered features a pronounced vertical mullion with staggered horizontal blades that can be customized in length and angle to create dramatic shadows. Choose Myriad Staggered when a more visually distinct pattern is desired.

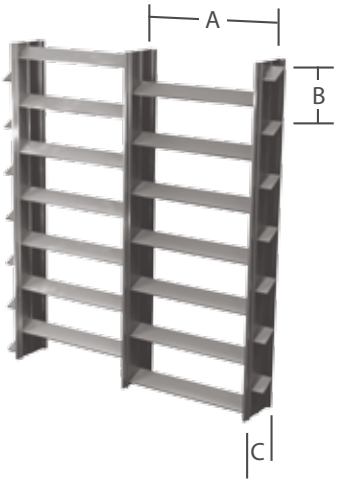


### Dimensions

**A:** Cell width: 4" to 12"
**B:** Cell height: 2" to 12"
**C:** Cell depth: 2.5"
Varies based on wind loading requirements

Blade depth: 1.5"
Blade tilt: 0° to 45°

Contact our design team to help you select the right product to meet your project's coverage, free area and screening requirements. Download CAD details and specs for each grille at **www.c-sgroup.com/grilles/geometric**.

## Myriad XXX

A distinctive grille, Myriad XXX features adjustable cell spacing and mullion depths, and is designed for sight cut-off or to screen solar rays. The 12-inch by 12-inch pattern is a dramatic yet economical screening system.

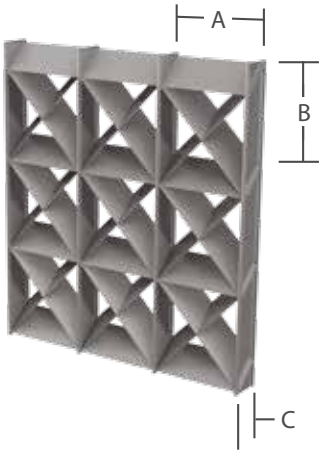


### Dimensions

**A:** Cell width: 4" to 12"
**B:** Cell height: 2" to 12"
**C:** Cell depth: 3.75"

Blade thickness: 0.081"
Frame thickness: 0.125"
Blade tilt: 0° to 45°

## Sentry

Sentry is an excellent security grille offered in aluminum with an optional stainless steel core that can be added for extra strength. Increase strength and spanning capability by altering the grille's cell size and depth.

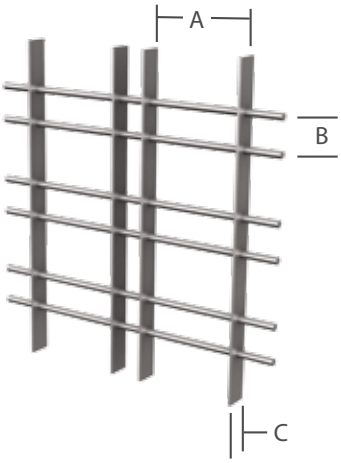


### Dimensions

**A:** Cell width: 3" to 12"
**B:** Cell height: 3" to 6"
**C:** Cell depth: 2"

# VISION BARRIER SCREENS

Specify a Construction Specialties Vision Barrier design anywhere you need **sight screening,** or a horizontal or vertical **accent wall**. Our rugged aluminum screen patterns are ideal for use on parking garages to shield automobile headlights and satisfy requirements for **free area movement**, and they provide **excellent spanning ability** to accommodate multiple-level decks. We offer a variety of linear extruded aluminum profiles to conceal mechanical equipment with style and color. Used on or at ground level, vision barriers **integrate beautifully** into the building's architecture. Varied height, width and blade spacing of each pattern provides unlimited options.

## Alumatex Madras

A great parking deck screen, Alumatex Madras is available in lengths to 20 feet and in all painted finishes.

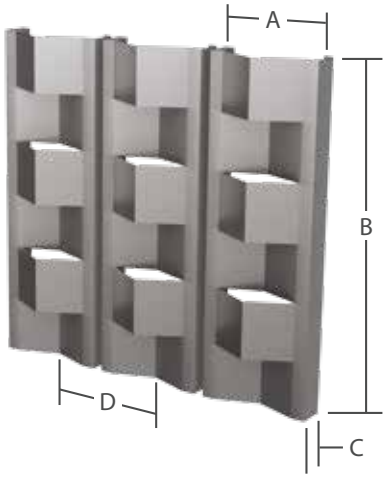


### Dimensions

**A:** Panel width: 12"
**B:** Panel height: 12' lengths
**C:** Panel depth: 3"
**D:** Panel spacing: 13" on center

Panel thickness: 0.04"
Panel openings: 4" to 12"

**Free Area:** 12.5%

## Alumatex Tweed

Alumatex Tweed is an attractive, economical facing panel perfect for refacing applications and parking garages. Available in lengths to 20 feet, this grille is available in any architectural finish.

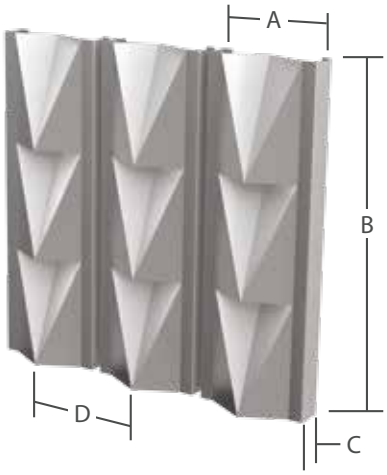


### Dimensions

**A:** Panel width: 12"
**B:** Panel height: 12' lengths
**C:** Panel depth: 3" inches
**D:** Panel spacing: 13" on center

Panel thickness: 0.04"

**Free Area:** 12.5%

## Econoscreen® RF-20

Econoscreen RF-20 features economical 0.020-inch-thick roll-formed aluminum blades in any painted finish. Blades install on 0.081-inch support runners that span up to 6 feet at 20 psf.

### Dimensions

**A:** Blade width: 3.5"
**B:** Varies based on wind loading requirements
**C:** Blade spacing: 4" on center

Blade thickness: 0.02"

**Free Area:** 10%

Contact our design team to help you select the right product to meet your project's coverage, free area and screening requirements. Download CAD details and specs for each grille at **www.c-sgroup.com/grilles/vision-barriers**.

## Econoscreen® RV-20

Perfect for rooftop enclosures, Econoscreen RV-20 is an easy- to-install, economical screening choice available in all finishes.

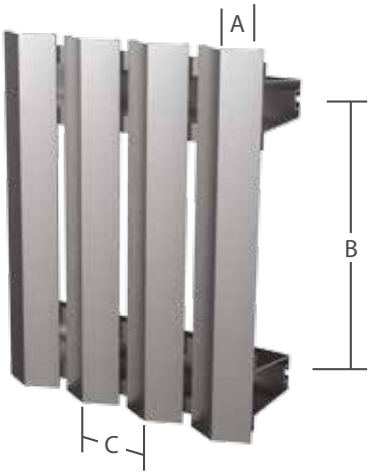


### Dimensions

**A:** Blade depth: 1.5"
**B:** Varies based on wind loading requirements
**C:** Blade spacing: 4" on center

Blade thickness: 0.02"

**Free Area:** 10%

## EL-160 and EL-240

Our two prefabricated EL Series screens offer a quick, economical way to conceal structures. The EL-160 provides a sleek look with maximum hiding capabilities. The EL-240 is more open for better line of sight.

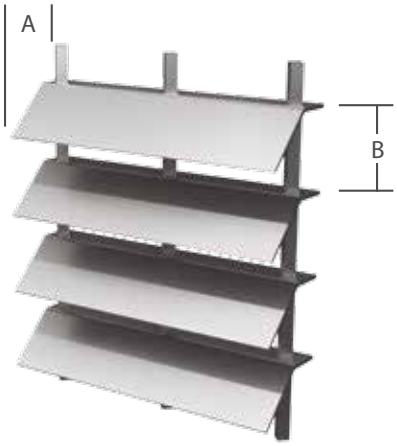


### Dimensions

**A:** Blade depth: 2.5"
**B:** Blade spacing: EL-160 1.57"
EL-240 2.36"

**Free Area:** EL-160 59%
EL-240 65%

## Vert-A-Cade® 201 and 301

This horizontal screen is our most economical extruded vision barrier and is ideal for use on rooftop equipment and parking decks.

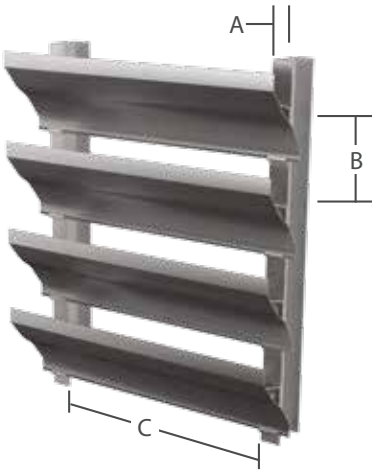


### Dimensions

**A:** Blade depth for VAC 201: 2"
Blade depth for VAC 301: 4"
**B:** Blade spacing for VAC 201: 2" on center
Blade spacing for VAC 301: 6.75" on center
**C:** Varies based on wind loading requirements

**Free Area:** VAC 201 48%
VAC 301 50%

## Bold Line

Bold Line adds drama to any screening system by allowing different blade depths and multiple colors, while providing high free area.

**Dimensions**
Blade depth: 4" with the Bold Blade being 6"
Blade spacing: 4" on center

**Free Area:** 58%

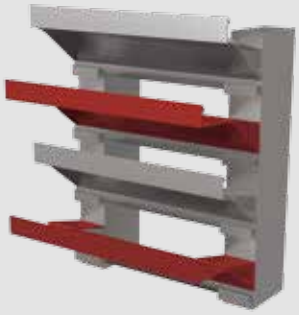

## Vert-A-Cade® 304

The VAC 304 horizontal screen provides high-performance free area with sight cut-off, with deep blades that create a heavy shadow line.

**Dimensions**
**A:** Varies based on wind loading requirements
**B:** Blade spacing: 4.75"
**C:** Blade depth: 6"

Blade thickness: 0.081"

**Free Area:** 60%

## Vert-A-Cade 400

The vertical line chevron blades of the VAC 400 create a 100% sight barrier from any angle, making it an excellent floor-level screen. VAC 400 also can be used horizontally.

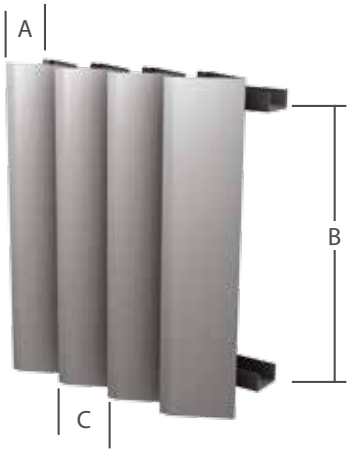


**Dimensions**
**A:** Blade depth: 4"
**B:** Varies based on wind loading requirements
**C:** Blade spacing: 4" on center

**Free Area:** 32%

## Vert-A-Cade 500 and 500M

Clean, crisp lines make the VAC 500 a popular screen that is perfect for hiding rooftop or street-level equipment. The 500M eliminates the back blade for higher free area.

**Dimensions**
**A:** Blade depth: 2"
**B:** Varies based on wind loading requirements
**C:** Blade spacing: 5" on center
**E:** Blade width: 3"

Blade thickness: 0.062"

**Free Area:** VAC 500 20%
VAC 500M 40%

Contact our design team to help you select the right product to meet your project's coverage, free area and screening requirements. Download CAD details and specs for each grille at **www.c-sgroup.com/grilles/vision-barriers**.

## Vert-A-Cade® 1000

The vertical blades of our VAC 1000 offer 100% sight cut-off with high free area, making it an excellent choice for parking garage and mechanical equipment screening.

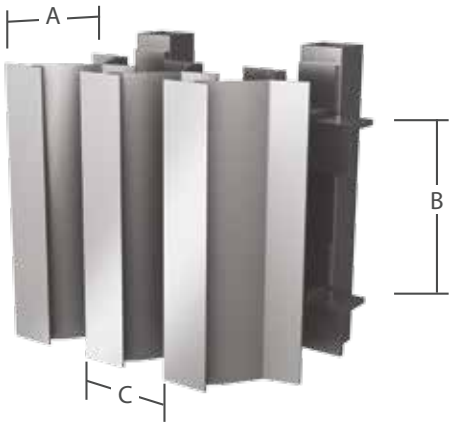


### Dimensions

**A:** Blade depth: 5.375"
**B:** Varies based on wind loading requirements
**C:** Blade spacing: 4.5" on center

Blade thickness: 0.081"

**Free Area:** 54%

## Vert-A-Cade 1100

The VAC 1100's deep Z-shaped blades can be used in either a vertical or horizontal configuration.

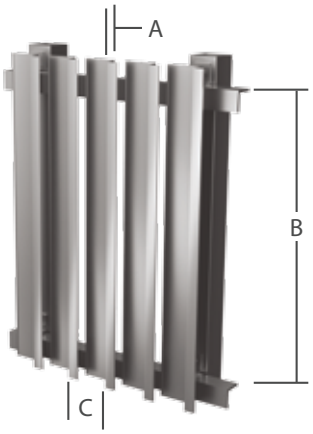


### Dimensions

**A:** Blade depth: 2.375"
**B:** Varies based on wind loading requirements
**C:** Blade spacing: 5" on center

Blade thickness: 0.081"

**Free Area:** 25%

## Vert-A-Cade 8000 and 6000

The VAC 8000 and 6000 both have deep, demi-fin blades, providing a bold sight line on any structure, and can be used both vertically and horizontally.

### Dimensions

**A:** Blade depth for VAC 8000: 8"
Blade depth for VAC 6000: 6"
**B:** Blade spacing: 7.875"
**C:** Varies based on wind loading requirements

Blade thickness: 0.10"

**Free Area:** 25%

Construction Specialties®

**CS creates products that solve complex building challenges around the world:**

- Acrovyn by Design®
- Acrovyn® Doors & Frames
- Acrovyn® Wall Panels
- Acrovyn® Wall Protection
- Architectural Louvers
- Cubicle Curtains & Track
- Entrance Flooring
- Expansion Joint Covers
- Grilles & Vision Barriers
- Specialty Venting
- Sun Controls

49 Meeker Avenue
Cranford, New Jersey 07016 U.S.A.
800.631.7379

895 Lakefront Promenade
Mississauga, Ontario L5E 2C2 Canada
888.895.8955

**www.c-sgroup.com**

*© Copyright 2016 Construction Specialties, Inc.*

*Construction Specialties, Inc. reserves the right to make design changes or to withdraw any design without notice.*
*Construction Specialties, Inc. holds a patent(s) on one or more of the products listed herein.*
*For detailed patent information, see www.c-sgroup.com/patents.*
*Printed in U.S.A. Series 17*

MIX
Paper from responsible sources
FSC® C103525